GEP-20A-F4

Manual V1.0

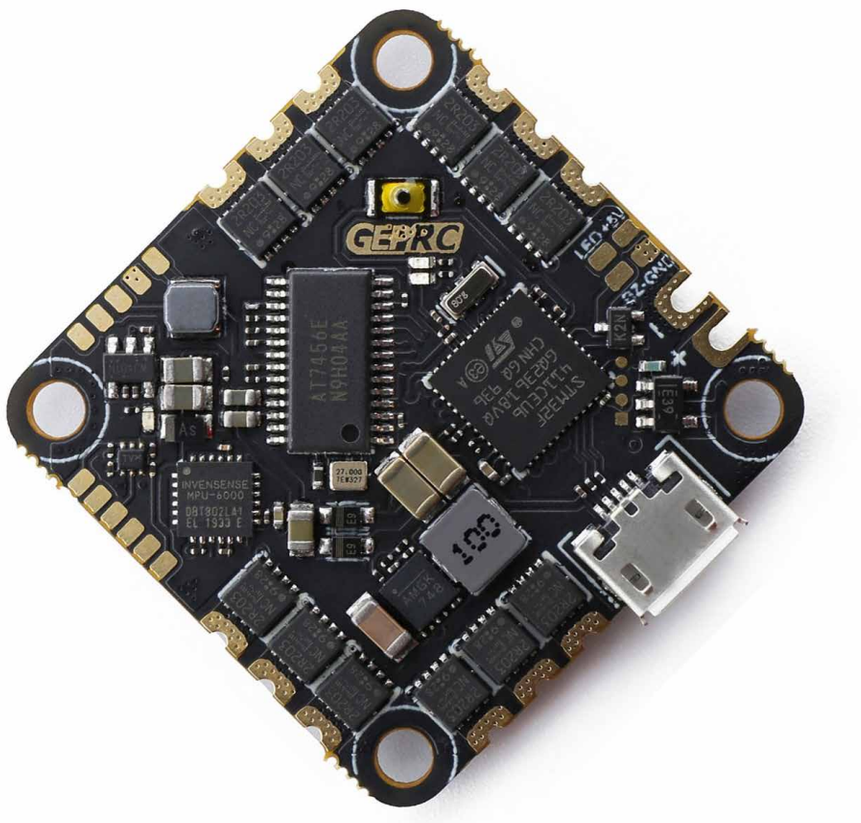

SPECS:

Model Name:GEP-20A-F4
MCU: STM32F411
IMU: MPU6000 gyro/accelerometer (SPI)
FC Firmware target:MATEKF411
OSD: BetaFlight OSD w/ AT7456E chip
Baro:NO
Current Monitoring : Support
Betaflight OSD : Support
External Buzzer : Support
LED : Support
USB Port: MicroUSB
BEC Output: 5V@1A

Integrated LC Filter
ESC MCU: BB21F16G
Continuous current: 20A
Peak current: 30A
Input:2-4s lipo
Supports Dshot600 ,Oneshot,Multishot
Current meter: 210
Target: G_H_30
Size: 32x32mm board,26.5mm mounting holes (M2)
Installing Hole: 26.5x26.5mm, M2

Instruction Diagram

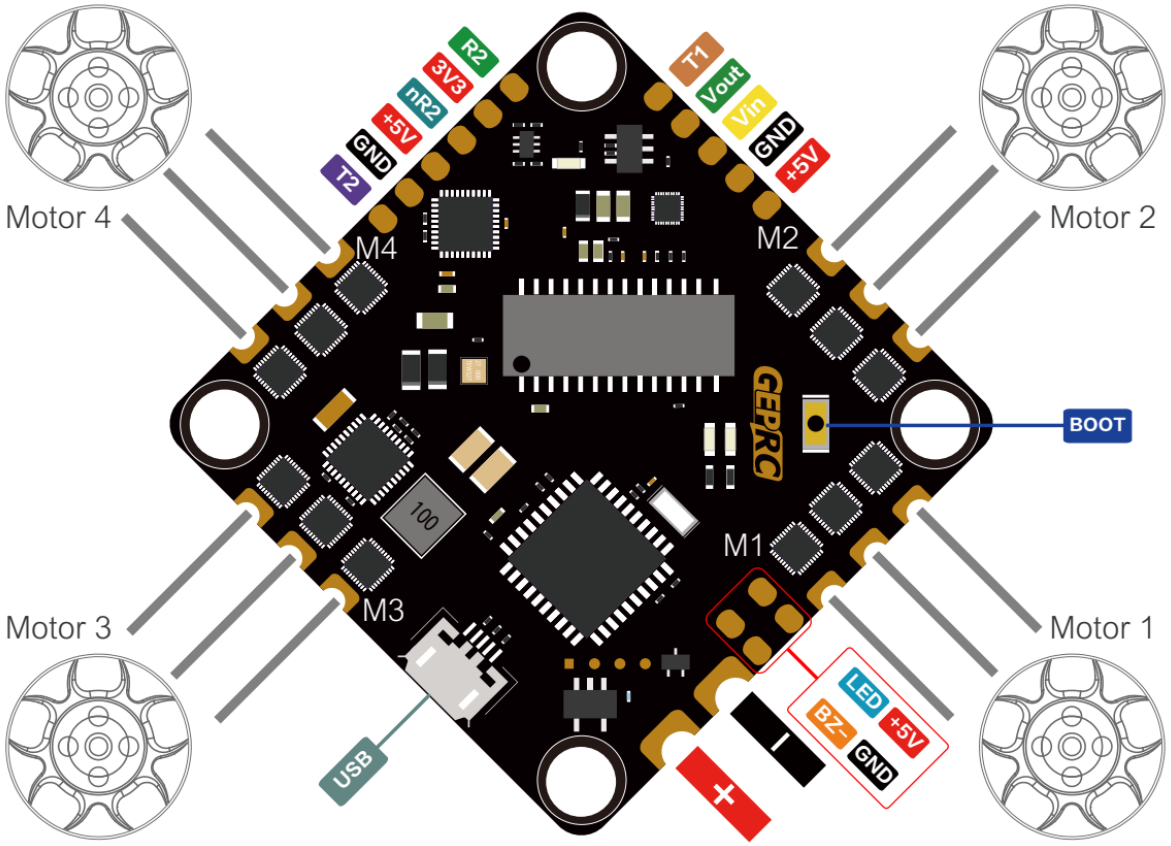

Receiver

Ports

WIKI

Note: not all combinations are valid. When the flight controller firmware detects this the serial port configuration will be reset.
Note: Do **NOT** disable MSP on the first serial port unless you know what you are doing. You may have to reflash and erase your configuration if you do.

Identifier	Configuration/MSP	Serial Rx	Telemetry Output	Sensor Input	Peripherals
USB VCP	115200		Disabled AUTO	Disabled AUTO	Disabled AUTO
UART1	115200		Disabled AUTO	Disabled AUTO	VTX (IRC Tran AUTO
UART2	115200		Disabled AUTO	Disabled AUTO	Disabled AUTO

SBUS

Receiver

Serial-based receiver (SPEKSAT, SBUS, Receiver Mode

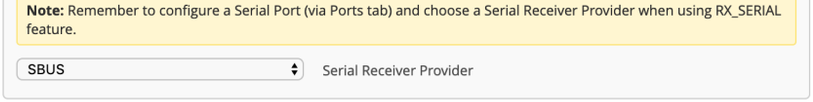

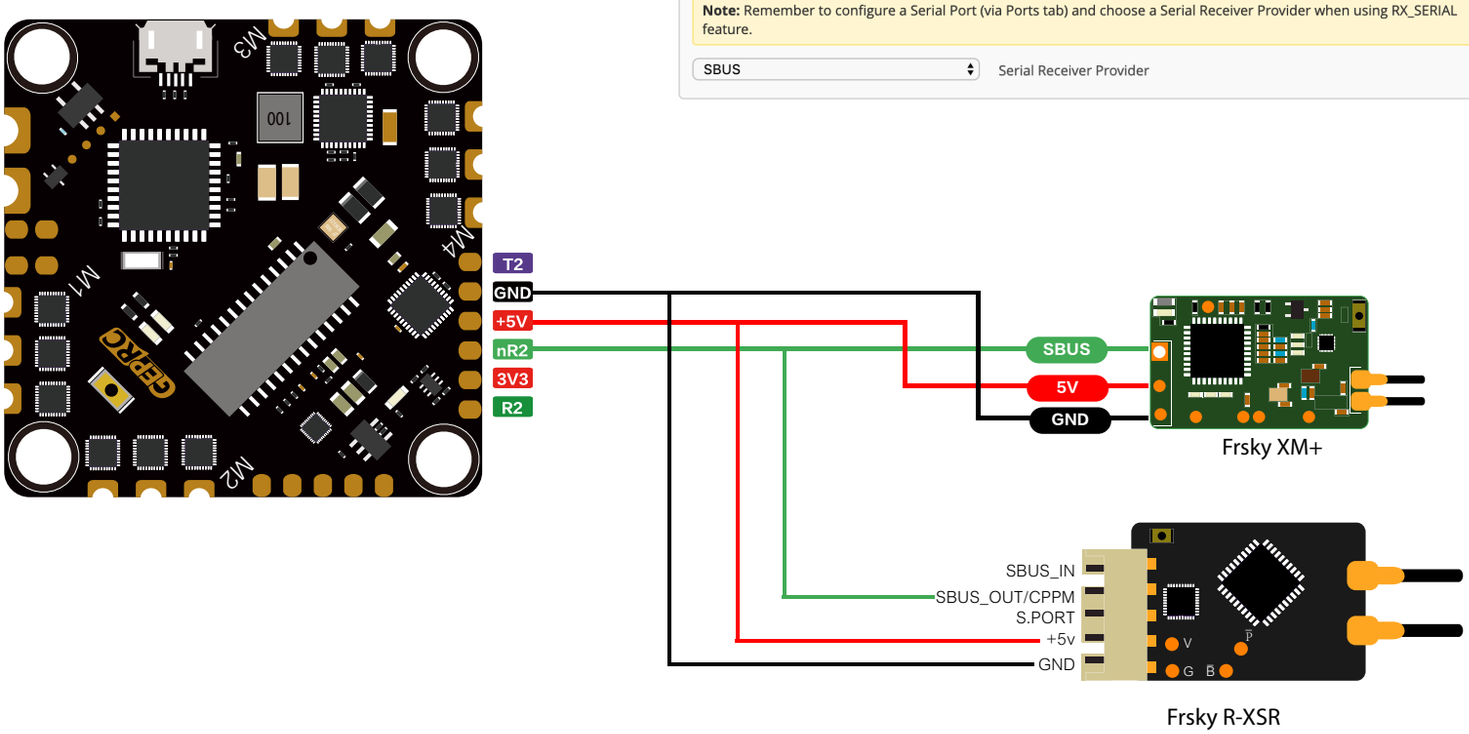

F.Port

CLI : set serialrx_halfduplex = ON
save

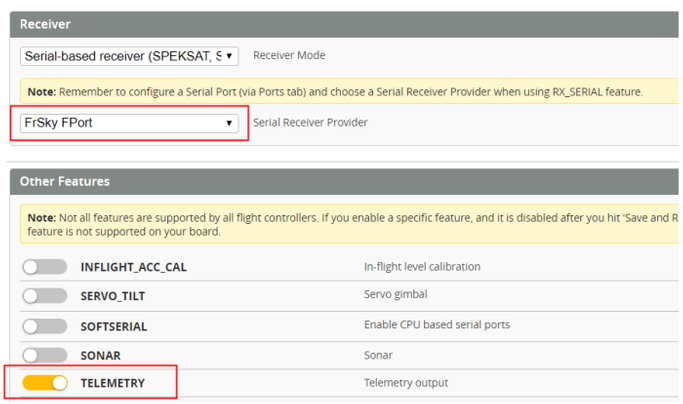

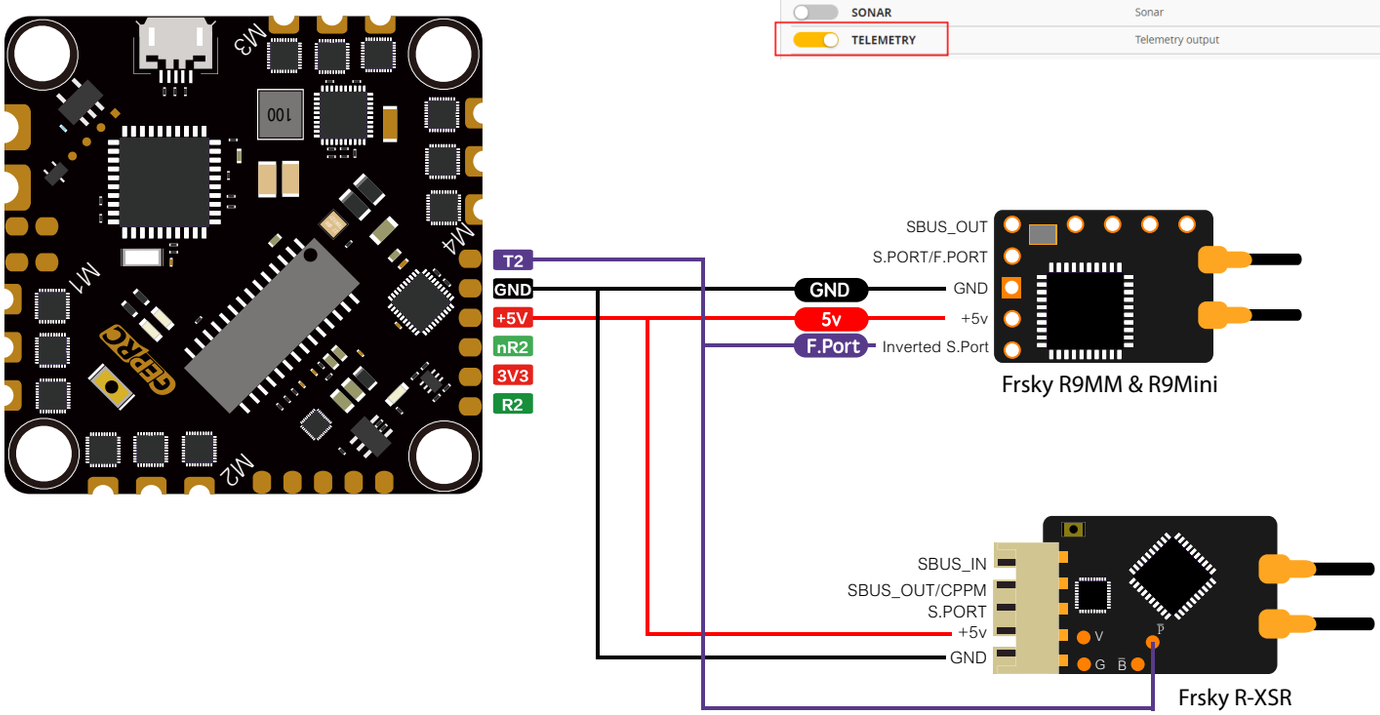

TBS Crossfire Nano RX

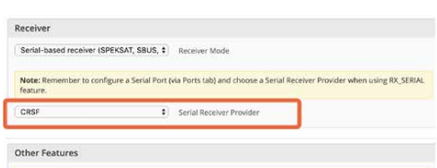

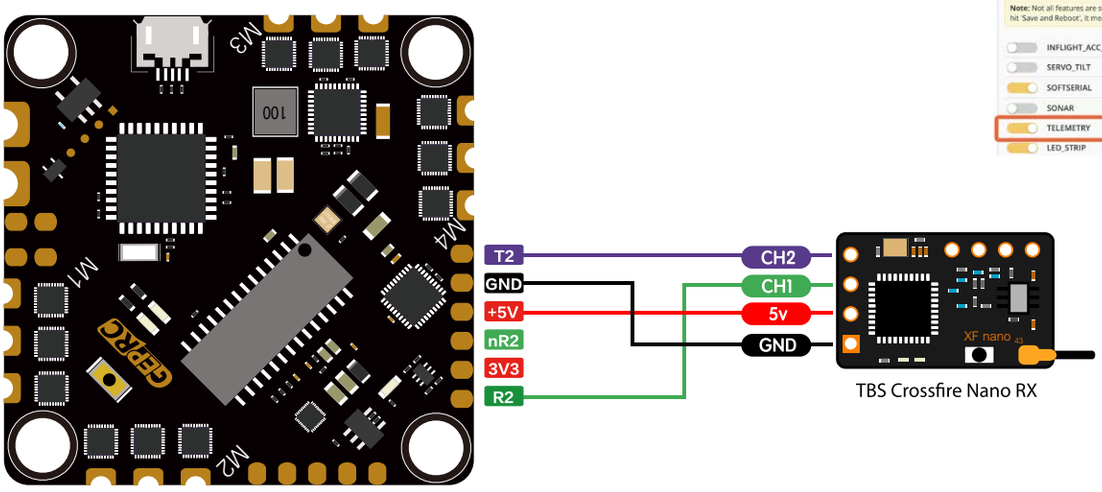

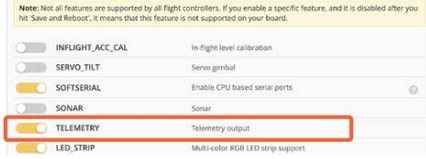

DSM/DSMX

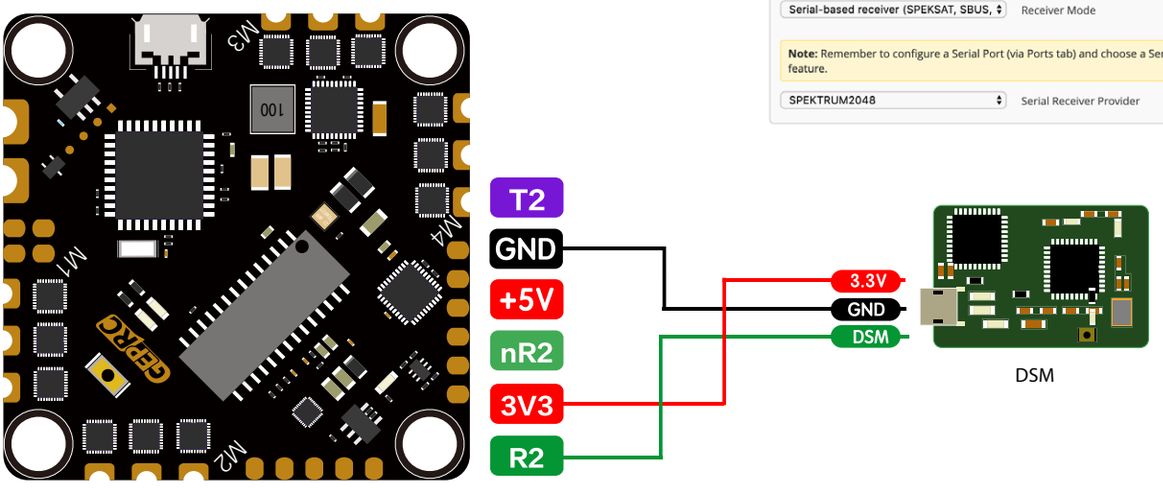

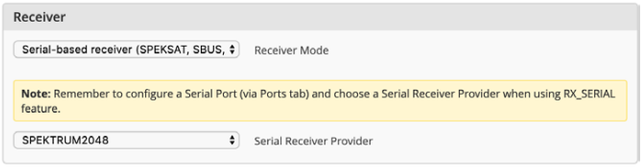

IBUS

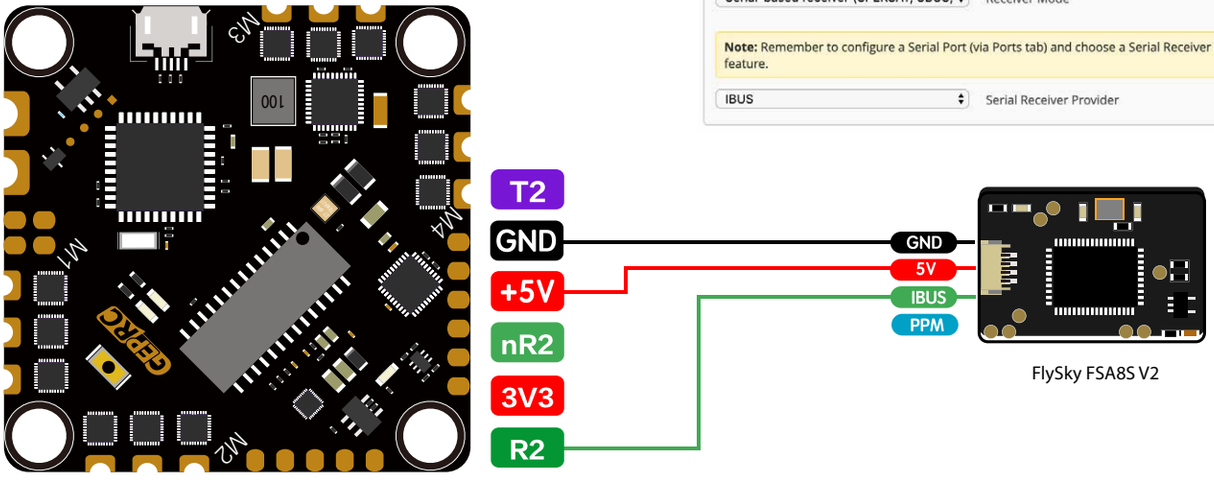

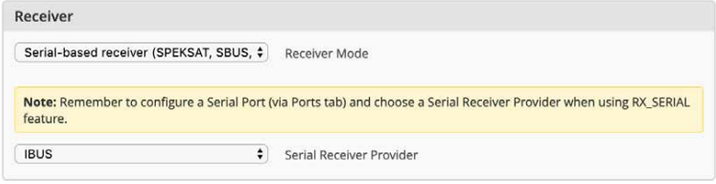

ESC

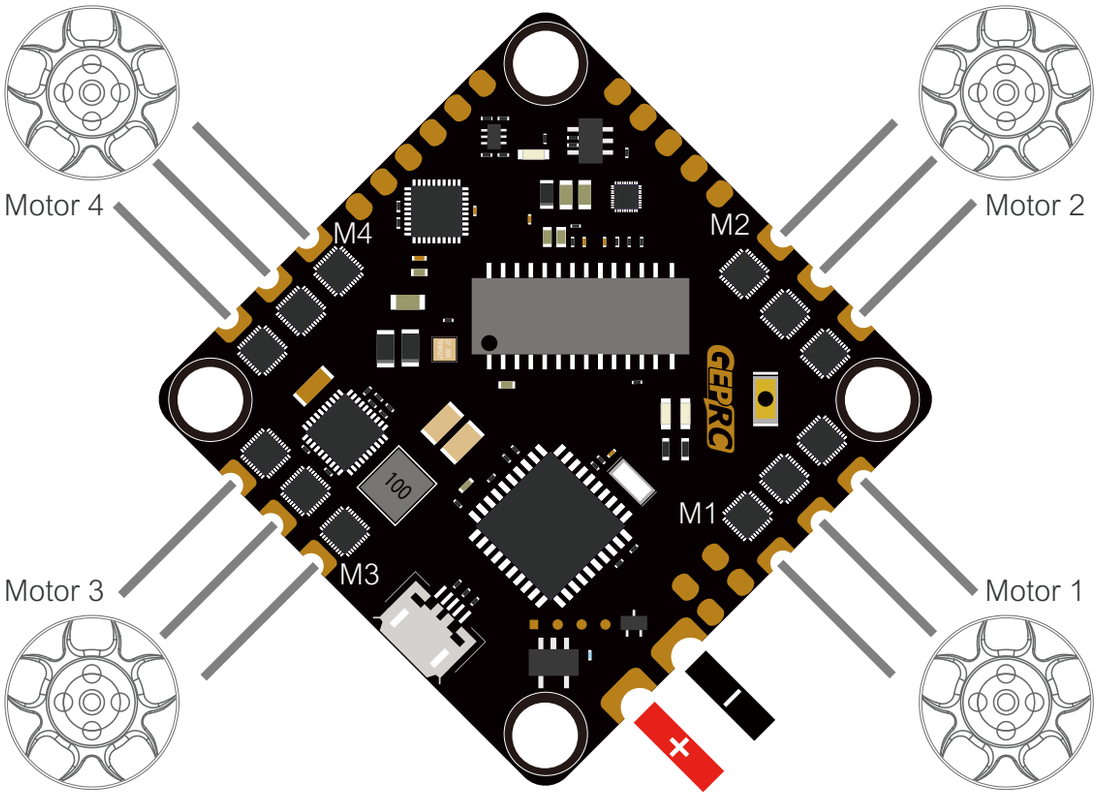

2-4S Lipo battery
BLHelis_S 20A 4in1 ESC(32*32 mm)

VTX

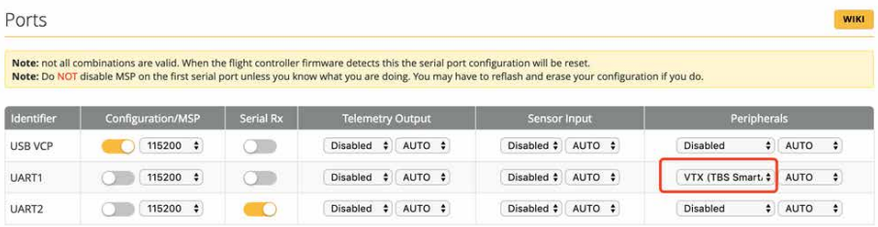

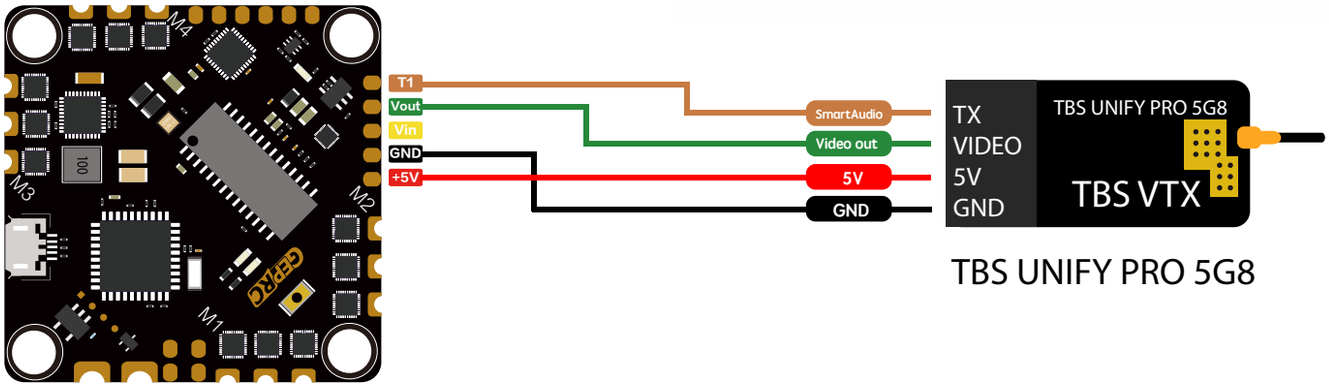

TBS UNIFY PRO 5G8

Note: not all combinations are valid. When the flight controller firmware detects this the serial port configuration will be reset.
Note: Do NOT disable MSP on the first serial port unless you know what you are doing. You may have to reflash and erase your configuration if you do.

Identifier	Configuration/MSP	Serial Rx	Telemetry Output	Sensor Input	Peripherals
USB VCP	115200		Disabled AUTO	Disabled AUTO	Disabled AUTO
UART1	115200		Disabled AUTO	Disabled AUTO	VTX (IRC Tramp) AUTO

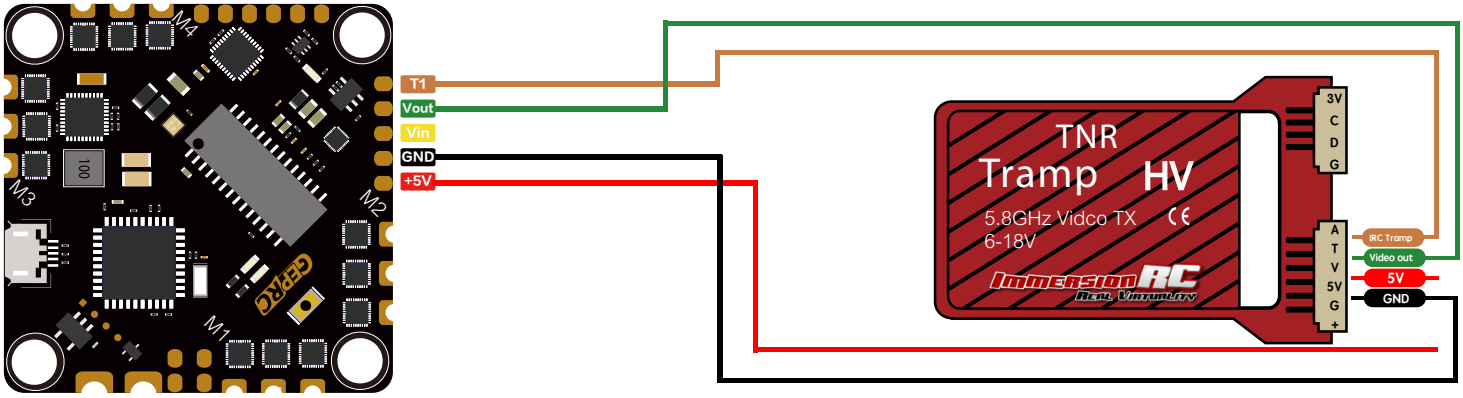

LED & Buzzer

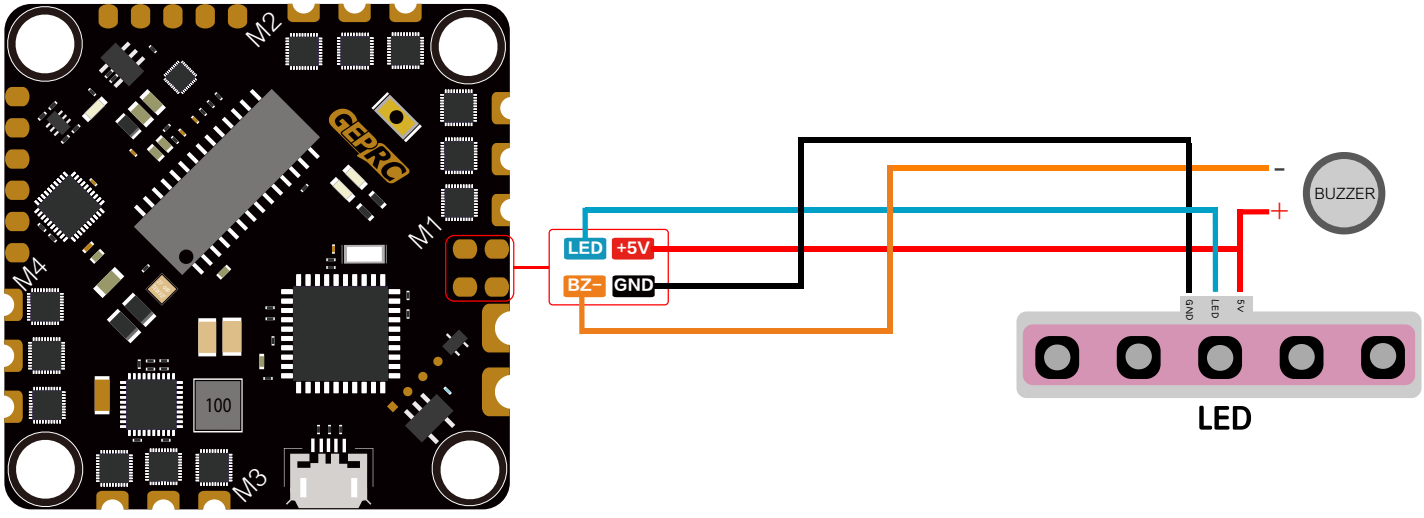

Camera

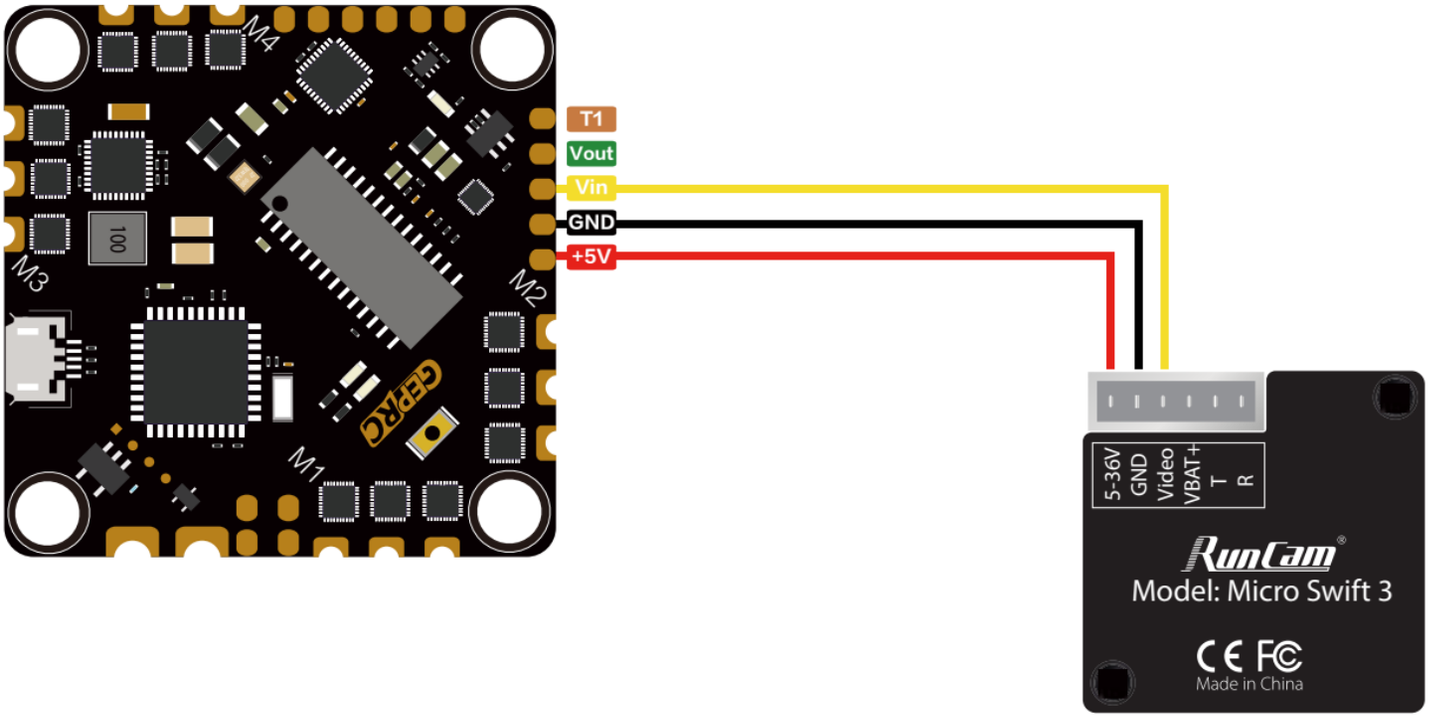

Official website
www.geprc.com

Manual
geprc.com/support

facebook
facebook.com/geprc

Instagram
instagram.com/geprc

GEPRC

www.geprc.com