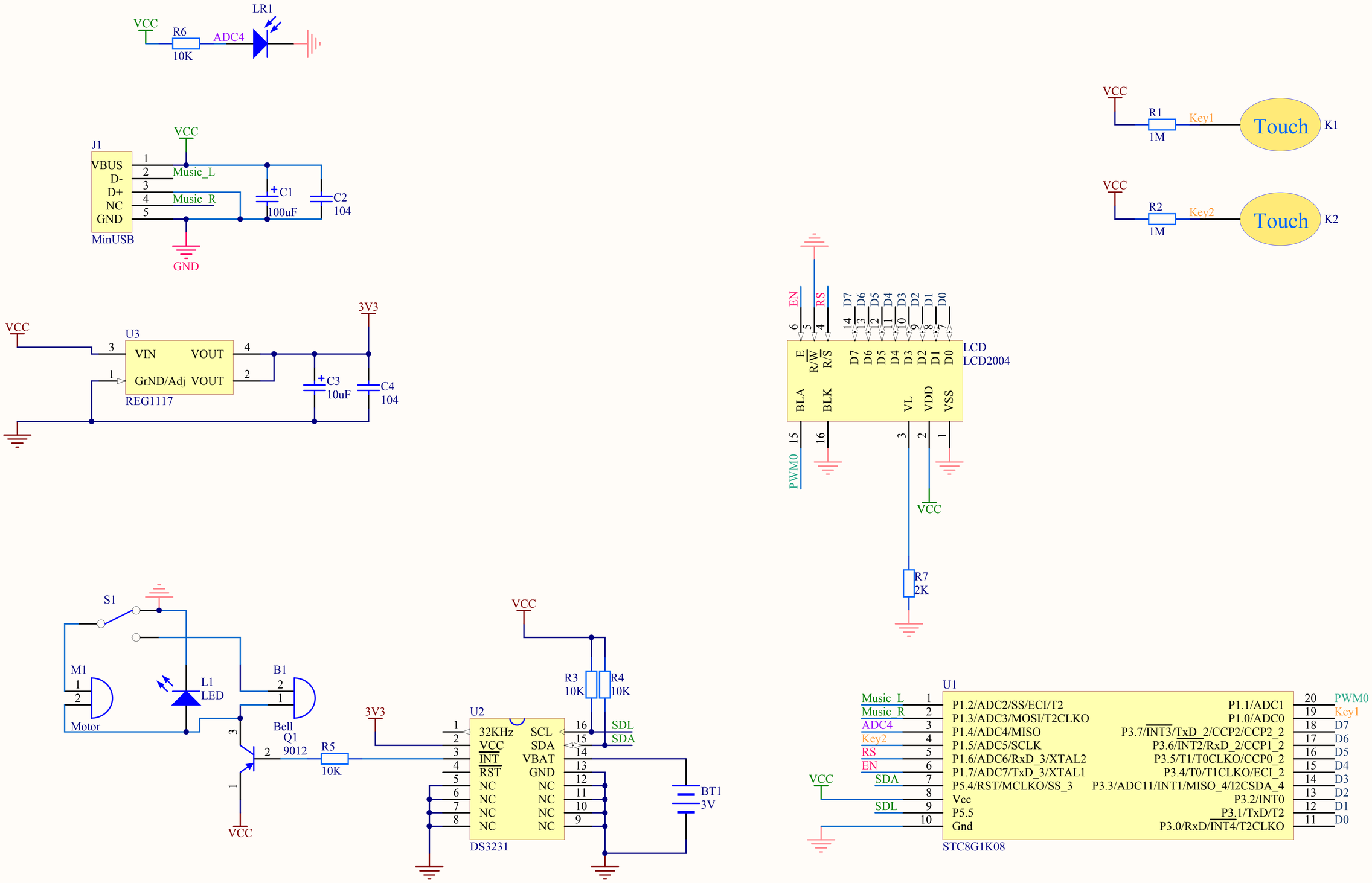
VCC
R6
10K
ADC4
LR1
J1
VBUS
D-
D+
NC
GND
MinUSB
Music_L
Music_R
C1
100uF
C2
104
GND
U3
VIN
VOUT
GrND/Adj
REG1117
3V3
C3
10uF
C4
104
S1
M1
Motor
L1
LED
B1
Bell
Q1
9012
R5
10K
U2
32KHz
SCL
SDA
INT
VBAT
RST
GND
NC
DS3231
R3
10K
R4
10K
SDL
SDA
BT1
3V
R1
1M
Key1
Touch
K1
R2
1M
Key2
Touch
K2
EN
RS
D7
D6
D5
D4
D3
D2
D1
D0
LCD
LCD2004
BLA
BLK
VL
VDD
VSS
PWM0
R7
2K
U1
P1.2/ADC2/SS/ECI/T2
P1.3/ADC3/MOSI/T2CLKO
P1.4/ADC4/MISO
P1.5/ADC5/SCLK
P1.6/ADC6/RxD_3/XTAL2
P1.7/ADC7/TxD_3/XTAL1
P5.4/RST/MCLKO/SS_3
Vcc
P5.5
Gnd
P1.1/ADC1
P1.0/ADC0
P3.7/INT3/TxD_2/CCP2/CCP2_2
P3.6/INT2/RxD_2/CCP1_2
P3.5/T1/T0CLKO/CCP0_2
P3.4/T0/T1CLKO/ECI_2
P3.3/ADC11/INT1/MISO_4/I2CSDA_4
P3.2/INT0
P3.1/TxD/T2
P3.0/RxD/INT4/T2CLKO
STC8G1K08