折页尺寸：140x297mm
总尺寸：420x297mm

1 Accessories list

1. Mobile Phone Stand 2. Pedals 3. Chargers 4. Foot support 5. Air Pump
6. 5mm Hexagon screw driver 7. 6mm Hexagon screw driver 8.Multi-type wrench

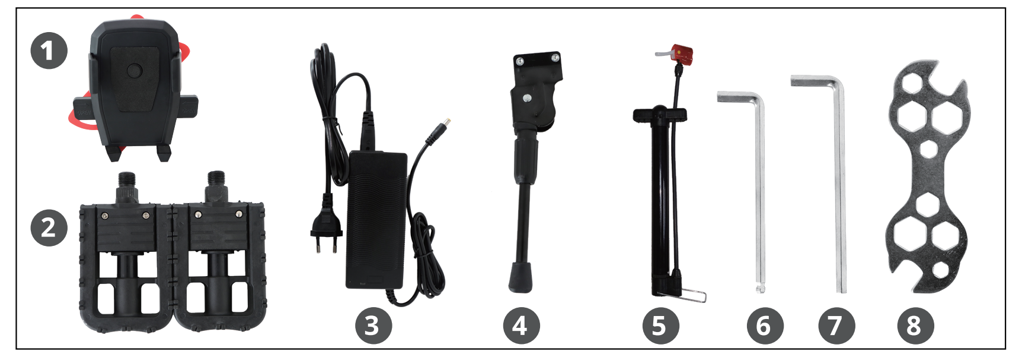

2 Installation Guide

Depending on the model, some steps have already been installed, just check it.

1. After opening the carton, take out the accessories, tools and bicycle

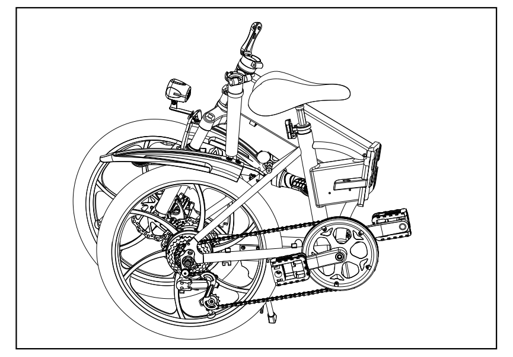

2. Unroll the body

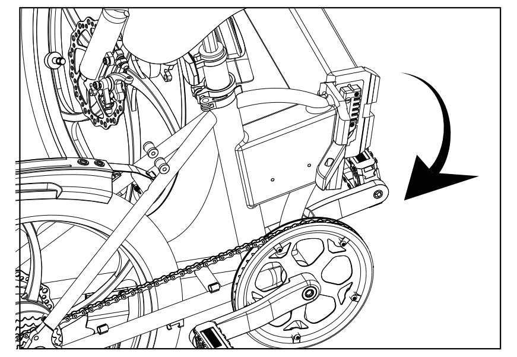

3. Close the body lock

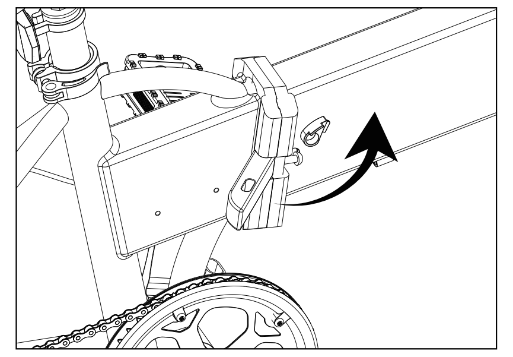

4. Fasten the safety lock

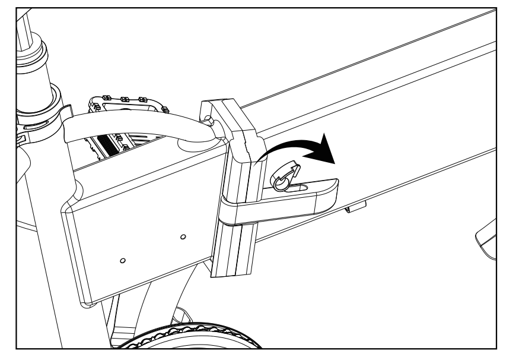

5. Prepare foot brace, use the ❻ tool to take out two 5mm hexagon screws locked in the foot brace

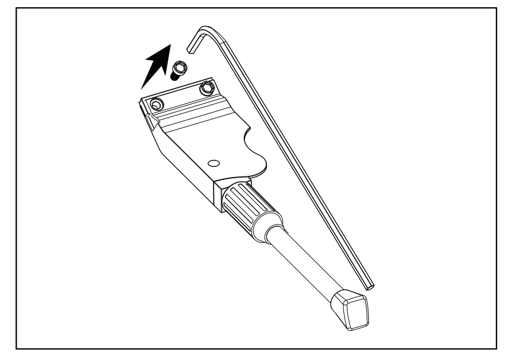

6. Place the foot brace behind the fender, use the ❻ tool to lock the screws

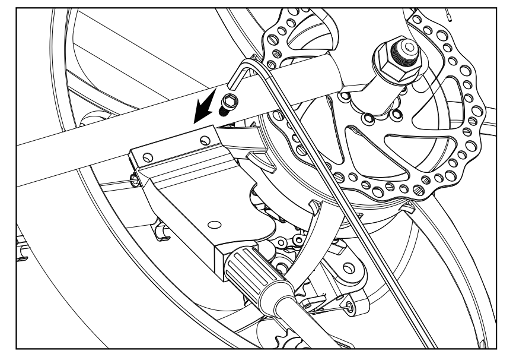

7. Place the head tube into the front fork head tube

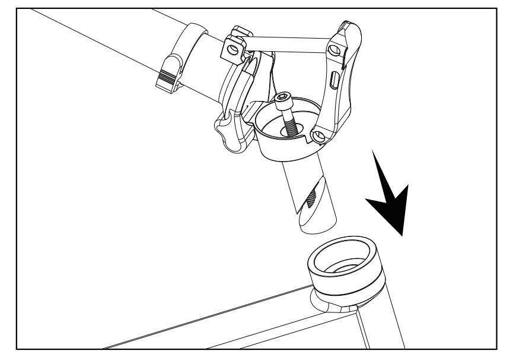

8. Straighten the head, confirm the arrow on the label aligns the mark lines

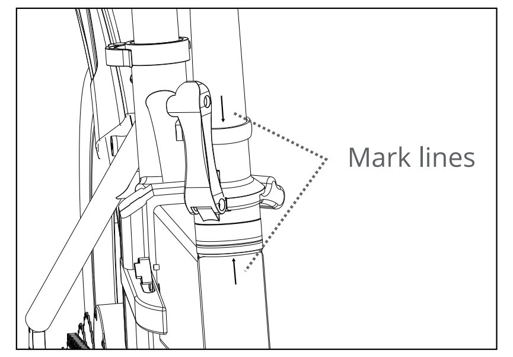

9. Open the lock firstly.After alignment, put down the tube, use the ❼ tool to lock the screws

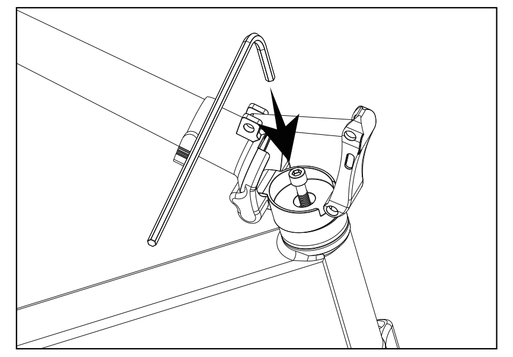

10. Put the tube up, close the head lock, snap the safety lock into the head lock

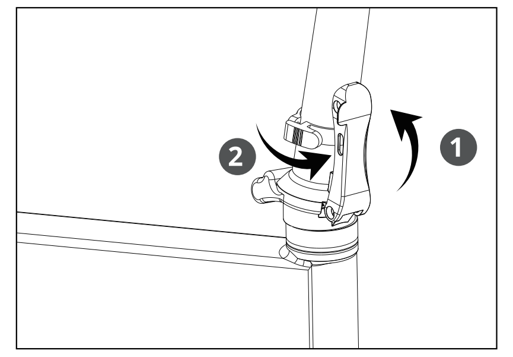

11. Open the handlebar lock, adjust the height of the head, and then lock tightly.

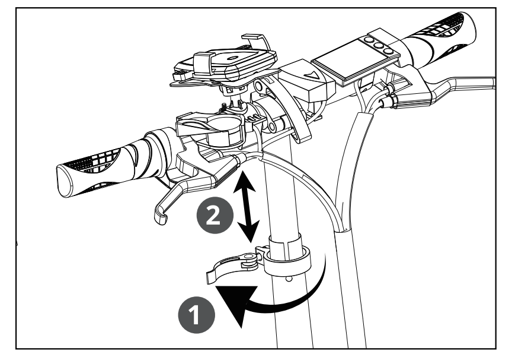

12. Open the cross handle lock, adjust the direction of the head grip, and then lock tightly.

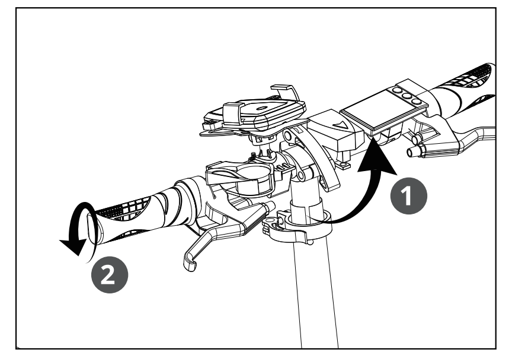

13. Insert the saddle into the saddle tube. Adjust the height of the saddle, and then lock tightly.

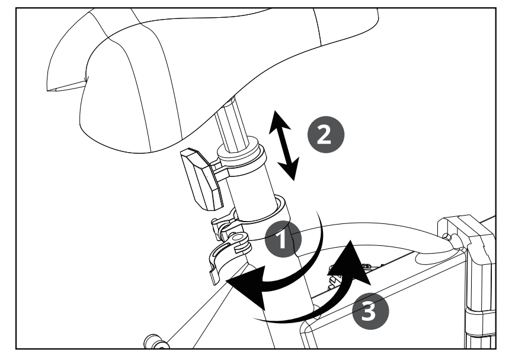

14. Take out the left and right pedals, use the ❼ tool to install the pedals on the crank

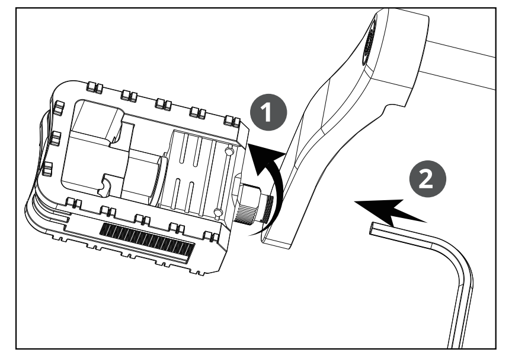

15. Turn the headlight to the front 30 degrees down position, use the ❽ tool to twist the screws.

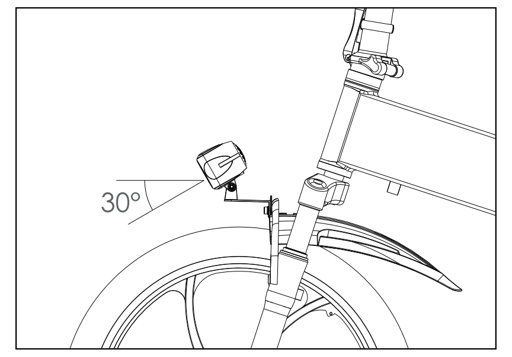

16. Finish the installation, use the pump to inflate the tires.

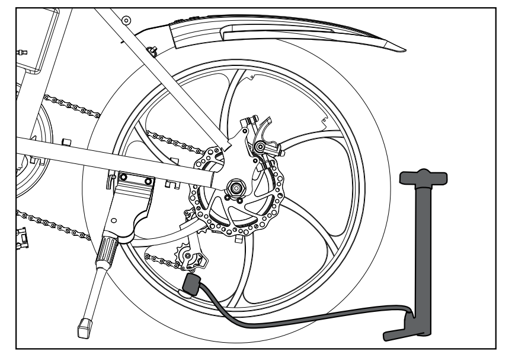

17. Before using the bicycle, insert the key and twist 45°counterclockwise, the battery has been started.

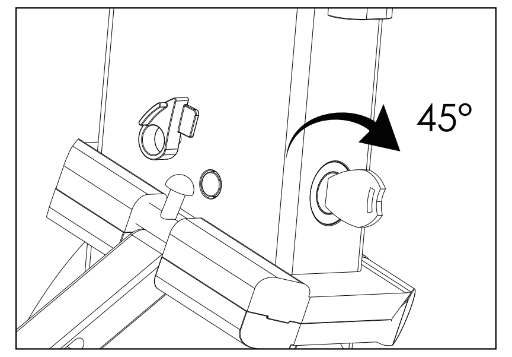

18. Finished using the bicycle, turn the key 45°clockwise, the battery has been disconnected, and take out the key.

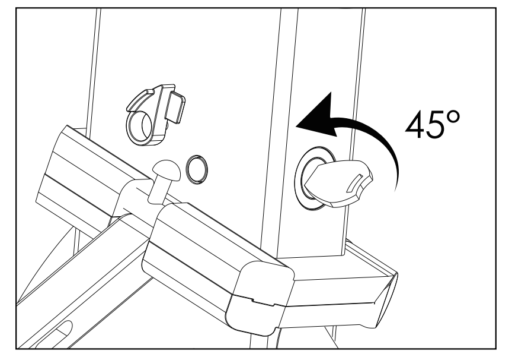

19.The step of removing battery, insert the key, press upward and then rotate 90°clockwise.

Note:Remove the key firstly,and then take out key and then take out the battery to avoid damaging the key.

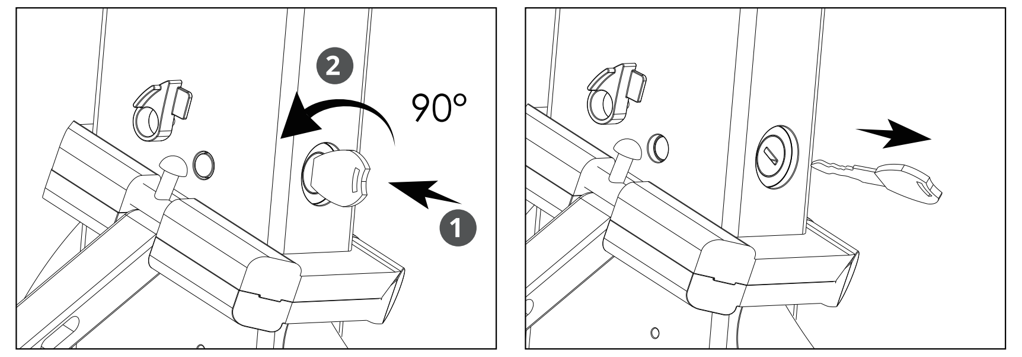

⚠ **Note:(**Assist gear instruction**)**
0 gear without power, driven by pedal.
First gear to pedal power, no power to handle.
Second gear medium power assist.
Third gear high speed power assist.

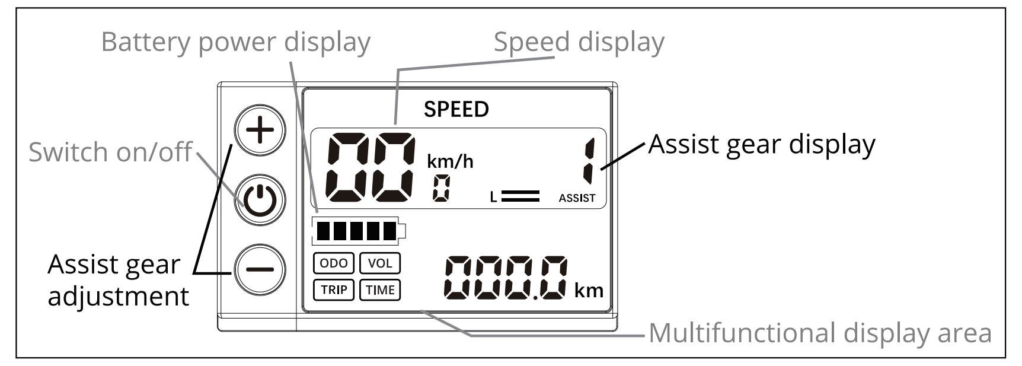

正面

ADO EBLKE

Quick Installation Guide

E-mail: support@adoebike.com

ADO offical website: www.adoebike.com

ADO offical website

ADO EBIKE
Installation Guide Video

反面