NIKOLATOY

www.nikolatoy.com

T56-A-15

Turboprop Engine from C-130 Hercules transport aircraft



© 2024 CADLY All rights reserved.

Electric Turboprop with Variable Pitch Propellers – Build Guide

v1.6

Printing Time: 90hrs
Parts: 152pcs
Filament: 2.9Kg







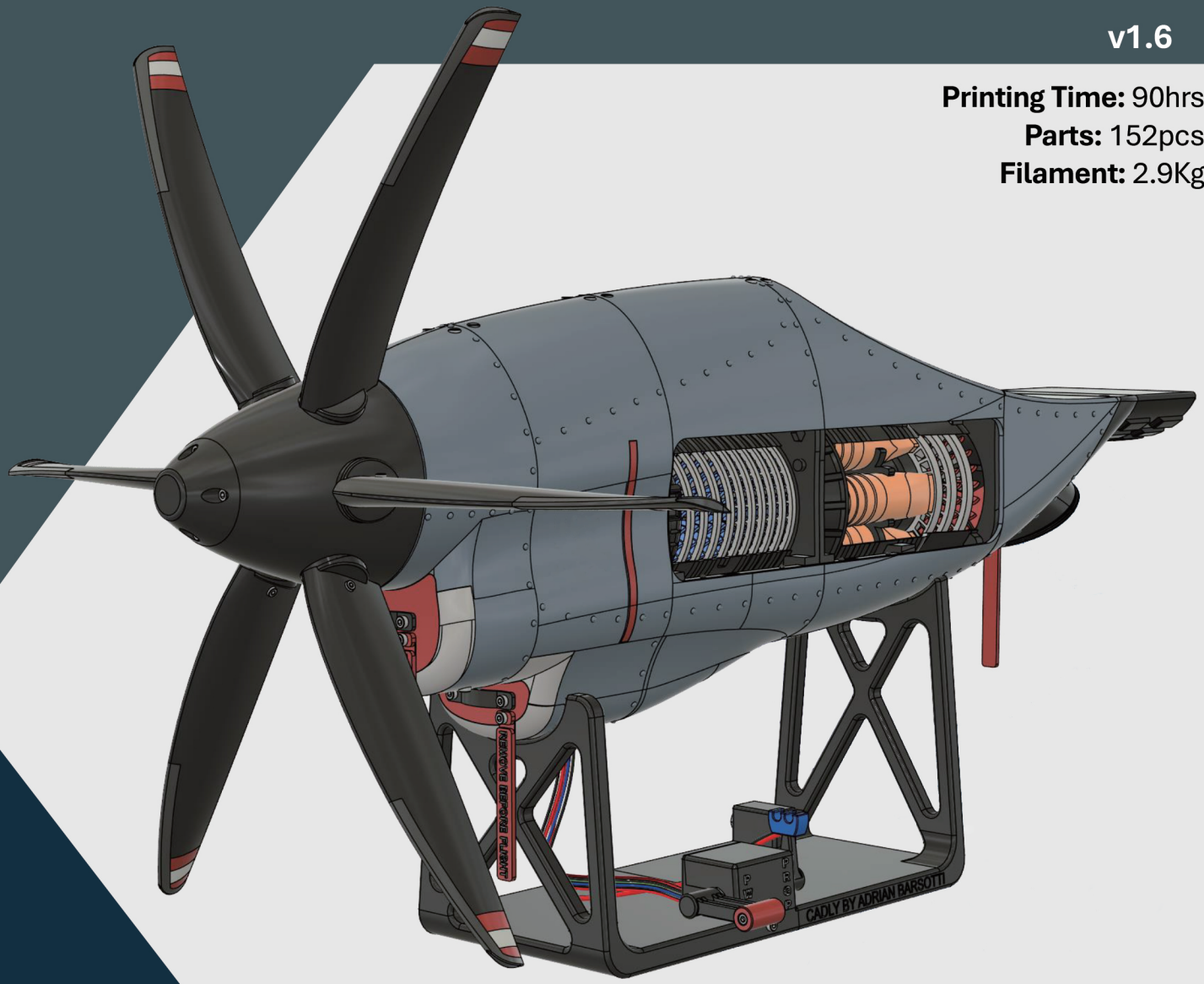

© 2024 CADLY All rights reserved.

Hardware Bill of Materials

Note: For the screws & bearings, the purchase links I have provided are sold in a set number of pieces.

For example: M3x8MM Hex Socket screws are sold as 100pc. You will need to purchase 2x to cover the 165pcs required for this build.

Ultimately, you can purchase your hardware form anywhere depending on your location. The provided link are to give you additional information.

Screws	Required (Pcs)	Total Cost
❑ M3x8MM Hex Socket Screws	165	$9.38 AUD
❑ M2.5x6MM Hex Socket Screws	9	$5.21 AUD
❑ M2x6MM Hex Socket Screws	2	$7.92 AUD
Bearings		
❑ 8MM Bearings (Inner Diameter: **8mm**, Outer Diameter: **16mm**, width: **5mm**)	11	$15.20 AUD
❑ 20MM Bearings (Inner Diameter: **20mm**, Outer Diameter: **32mm**, width: **7mm**)	6	$39.98 AUD
Electronics		
❑ Arduino/Elegoo NANO Microcontroller	1	$24.99 AUD
❑ Arduino NANO Expansion I/O Shield	1	$5.95 AUD
❑ Terminal Power Distribution Board	2	$25.98 AUD
❑ SG-5010 or MG996R Servo w/ Round Arm Attachment	1	$29.95 AUD
❑ L298N DC Motor Driver	1	$17.00 AUD
❑ 70 RPM 12V DC Motor (**15mm** diameter mount spacing)	1	$17.95 AUD
❑ 2.1MM Power Jack w/Nut (**8mm** mounting diameter)	1	$3.50 AUD
❑ 10K Linear Potentiometer w/Nut (**6.5mm** mounting diameter)	2	$4.95 AUD
❑ 12V/3A DC Power Supply (Anything above 2A will work)	1	$17.98 AUD
Wiring & Cable Management		
❑ 22AWG Wire (Signal & 5v)	As required	-
❑ 16AWG Wire (12V Power)	As required	-
❑ Heat-shrink tubing	As required	-
❑ Wire Wrap 8 – 10mm	As required	$8.00 AUD
❑ Arduino Jumper Wires (300mm) (Connect L298N to Arduino Shield)	3	$11.00 AUD
Total Cost		*$231.95 AUD*

Filament Usage Breakdown

	Brand	Type	Colour	Filament Used (Kg)
❑	Bambu Lab	PLA	Black	1.60
❑	Bambu Lab	PLA	Red	0.050
❑	Bambu Lab	PLA	Silver	0.160
❑	Bambu Lab	PLA	White	0.010
❑	Bambu Lab	PLA	Blue Grey	0.650
❑	Bambu Lab	PLA	Blue	0.086
❑	Bambu Lab	PLA	Purple	0.146
❑	eSUN	PLA	Orange	0.065
❑	3D-Fillies	PLA	Pastel Blue	0.100

Total Filament Used: 2.9

Total Filament Cost: $70.00 AUD (for approx. 3 rolls. However, for more colour variation may cost more)

Total Printing Hours: 90hrs (X1C – Standard speed profile)

Ultimately, you can use any colour combination for this build.

CAD Editable Parts (.f3d)

If you're unable to find the recommended DC motor, I have provided a .f3d file for the **DC MOTOR MOUNT** and **DC MOTOR POWER GEAR**.

This will allow you to edit these files in CAD to suit your motor. I have indicated the features that likely need editing.

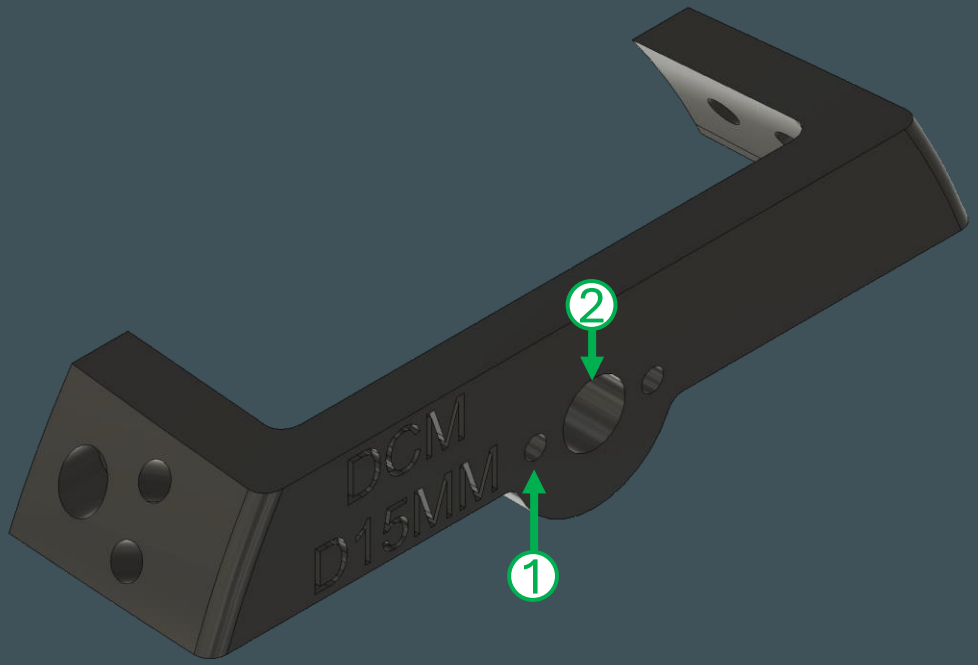

DC_MOTOR_MOUNT.f3d

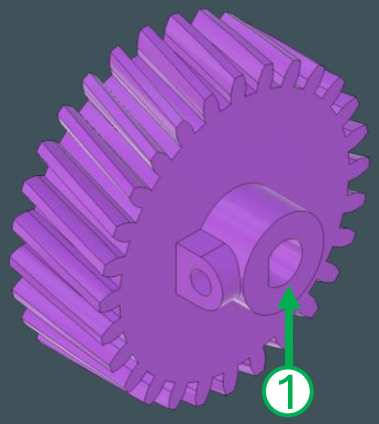

DC_MOTOR_POWER_GEAR.f3d

Required Tools

- 1.5MM Hex Screwdriver
- 2.0MM Hex Screwdriver
- 2.5MM Hex Screwdriver
- Phillips Head Screwdriver
- Flat Head Screwdriver
- Soldering Iron w/ Solder and Flux
- Pliers
- Super Glue (Optional)
- Sandpaper
- Wire strippers

Wiring Diagram

Note 1:
The Power Distribution Boards don't have to be used in this build. They are used to make the wiring easy, reducing the amount of soldering needed.

Note 2:
For the ENA, IN1 & IN2 wiring, Arduino jumper (Female to tinned wires 300mm) were used to easily connect the L298N DC Motor Driver pins to the Arduino NANO Expansion shield screw terminals. This reduces the soldering needed.

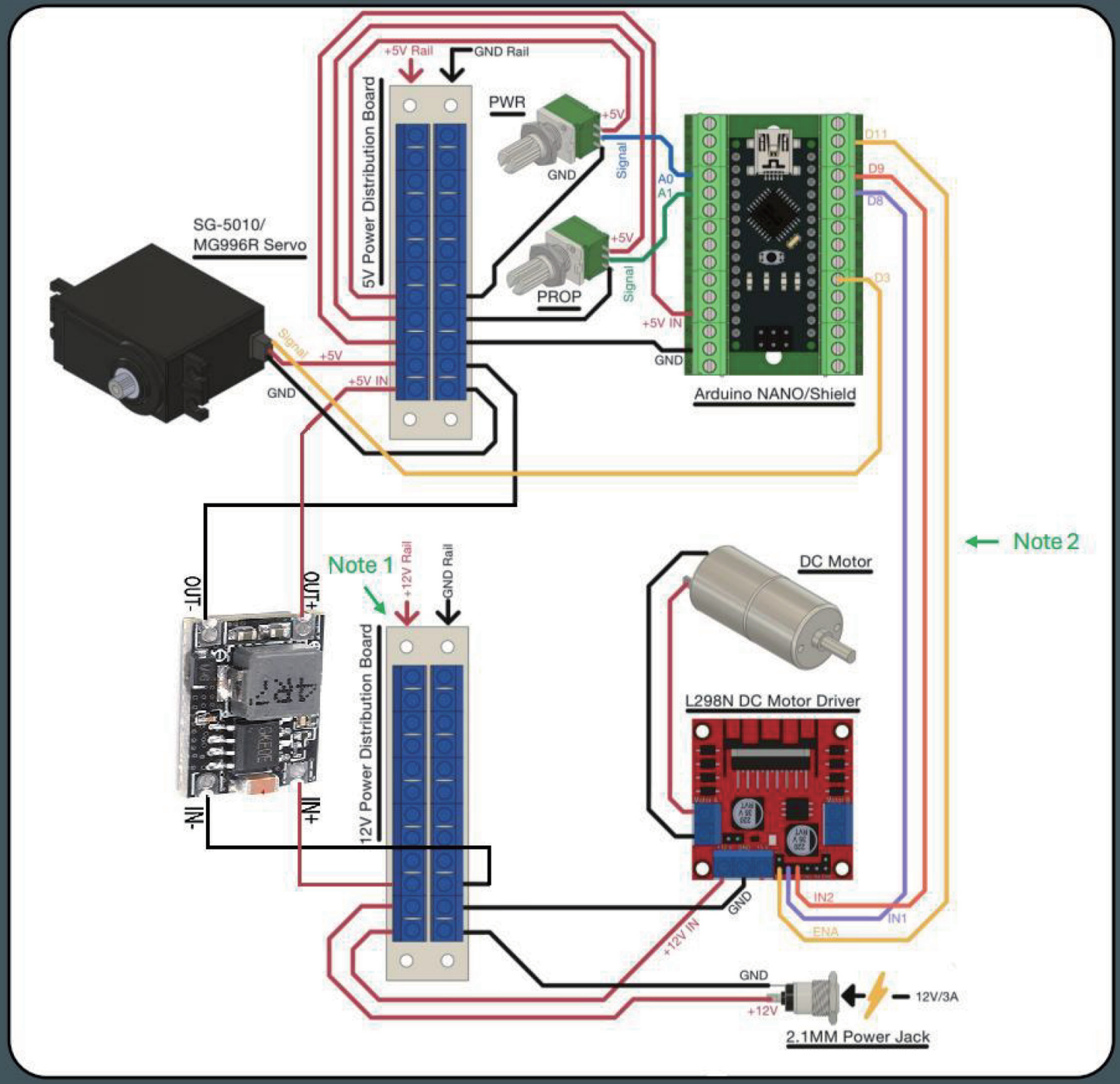

Parts Checklist – 152pcs (excluding optional multi-material parts)

1. PROPELLER ASSEMBLY
- ❑ PROP ALIGNMENT TOOL
- ❑ PROP BLADE
- ❑ C-CLIP SIZE A (4x)
- ❑ NOSE CONE A
- ❑ NOSE CONE B
- ❑ NOSE CONE PLATE
- ❑ NOSE CONE POWER SHAFT
- ❑ PROP CONTROL GEAR – 1
- ❑ PROP CONTROL GEAR – 2
- ❑ PROP CONTROL GEAR – 3
- ❑ PROP CONTROL GEAR – 4
- ❑ PROP CONTROL GEAR – 5
- ❑ PROP CONTROL GEAR – 6
- ❑ PROP CONTROL GEAR – 7
- ❑ PROP CONTROL TRANSFER SHAFT
- ❑ PROP (6x)
- ❑ *PROP MULTI-MATERIAL (OPTIONAL)*

2. FRAME SUBASSEMBLY A
- ❑ FP1
- ❑ FP2
- ❑ FP3
- ❑ INLET A
- ❑ INLET COWLING A
- ❑ MAIN DRIVE PLANET GEAR – 1
- ❑ MAIN DRIVE PLANET GEAR – 2
- ❑ MAIN DRIVE PLANET GEAR – 3
- ❑ MAIN DRIVE SUN GEAR
- ❑ PLANET CARRIER
- ❑ PROP CONTROL PLANET GEAR – 1
- ❑ PROP CONTROL PLANET GEAR – 2
- ❑ PROP CONTROL PLANET GEAR – 3
- ❑ PROP CONTROL RING GEAR
- ❑ PROP CONTROL SUN GEAR

3. FRAME SUBASSEMBLY B
- ❑ DC MOTOR MOUNT
- ❑ DC MOTOR POWER GEAR
- ❑ FP4
- ❑ FP5
- ❑ INLET B
- ❑ INLET C
- ❑ INLET COWLING B
- ❑ L1A
- ❑ L1B
- ❑ L2A
- ❑ L2B
- ❑ POWER SHAFT A
- ❑ POWER SHAFT TRANSFER GEAR
- ❑ PROP CONTROL SHAFT

4. FRAME SUBASSEMBLY C
- ❑ COMPRESSOR CASING
- ❑ FP6
- ❑ FP7
- ❑ HPC – 1
- ❑ HPC – 2
- ❑ HPC – 3
- ❑ HPC – 4
- ❑ HPC – 5
- ❑ HPC – 6
- ❑ HPC – 7
- ❑ HPC – 8
- ❑ HPC – 9
- ❑ HPC – 10
- ❑ HPCS – 1
- ❑ HPCS – 2
- ❑ HPCS – 3
- ❑ HPCS – 4
- ❑ HPCS – 5
- ❑ HPCS – 6
- ❑ HPCS – 7
- ❑ HPCS – 8
- ❑ HPCS – 9
- ❑ HPCS – 10
- ❑ HPCS – 11
- ❑ INLET D
- ❑ L3 66MM
- ❑ L4A
- ❑ L4B
- ❑ L7C 66MM
- ❑ POWER SHAFT B
- ❑ PROP CONTROL GEAR A
- ❑ PROP CONTROL GEAR B

5. FRAME SUBASSEMBLY D
- ❑ COMBUSTION A
- ❑ COMBUSTION B
- ❑ COMBUSTION CASING
- ❑ COMBUSTION CHAMBER (6x)
- ❑ COMBUSTION CLIP A
- ❑ COMBUSTION CLIP B
- ❑ EXHAUST
- ❑ FP8
- ❑ FP9
- ❑ FP10
- ❑ HPT – 9
- ❑ HPT – 10
- ❑ HPT – 11
- ❑ HPTS – 9
- ❑ HPTS – 10
- ❑ HPTS – 11
- ❑ L5A
- ❑ L5B
- ❑ L6A
- ❑ L6B
- ❑ POWER SHAFT C
- ❑ POWER SHAFT CAP
- ❑ POWER SHAFT D

6. CONTROLS & POWER ASSEMBLY
- ❑ CONTROLS CASING A
- ❑ CONTROLS CASING B
- ❑ CONTROLS CASING MULTI-MATERIAL (OPTIONAL)
- ❑ POWER CASING

7. CONTROLS & POWER ASSEMBLY
- ❑ C-CLIP SIZE B
- ❑ POWER SHAFT GEAR
- ❑ PROP KNOB
- ❑ PROP LEVER
- ❑ PWR KNOB
- ❑ PWR LEVER

8. COWLING INSTALLATION
- ❑ COWLING 1A
- ❑ COWLING 1B
- ❑ COWLING 2A INSERT
- ❑ *COWLING 2A MULTI-MATERIAL (OPTIONAL)*
- ❑ COWLING 2A
- ❑ COWLING 2B INSERT
- ❑ *COWLING 2B MULTI-MATERIAL (OPTIONAL)*
- ❑ COWLING 2B
- ❑ COWLING 3A DOOR
- ❑ COWLING 3A DOOR
- ❑ COWLING 3A UNDERSIDE
- ❑ COWLING 3B
- ❑ COWLING 4A DOOR
- ❑ COWLING 4A TOP
- ❑ COWLING 4A UNDERSIDE
- ❑ COWLING 4B
- ❑ COWLING 5
- ❑ COWLING BRACKET
- ❑ STAND BRACKET

9. STAND ASSEMBLY
- ❑ STAND A
- ❑ STAND B

10. INLET & EXHAUST COVERS (OPTIONAL)
- ❑ COVER BASE A
- ❑ COVER BASE B
- ❑ COVER BASE C
- ❑ COVER HANDLE (3x)
- ❑ COVER TAG (3x)

Part Orientation & Print Settings

I have provided the following graphics if you use a different slicer than Bambu Studio as the .3mf file I have provided. This shows basic print settings and part orientation for each 3D printed part.

If you're using this .3mf file, you can skip this step and begin Pre-assembly Wiring.
Go to Slide 39.

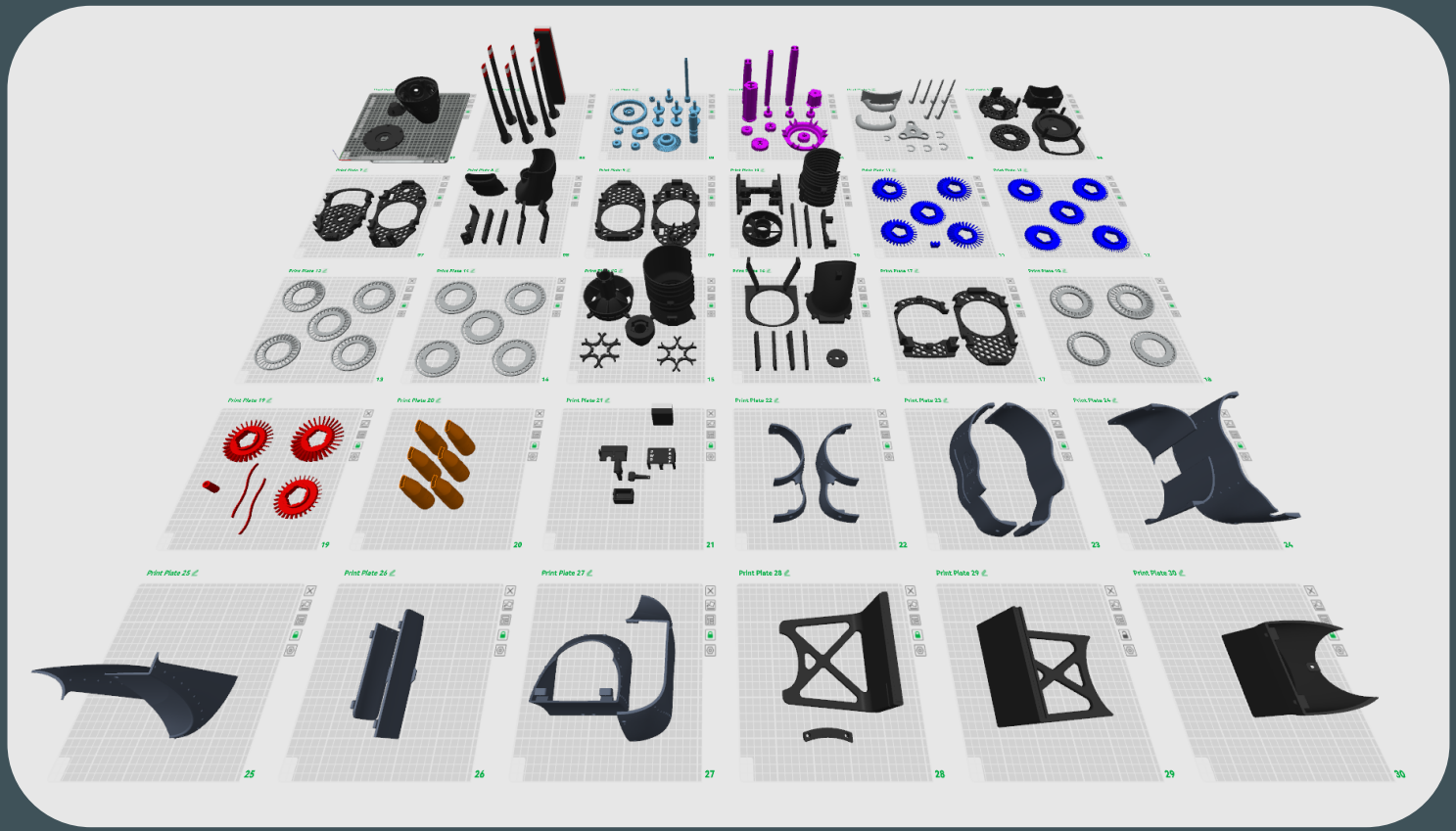

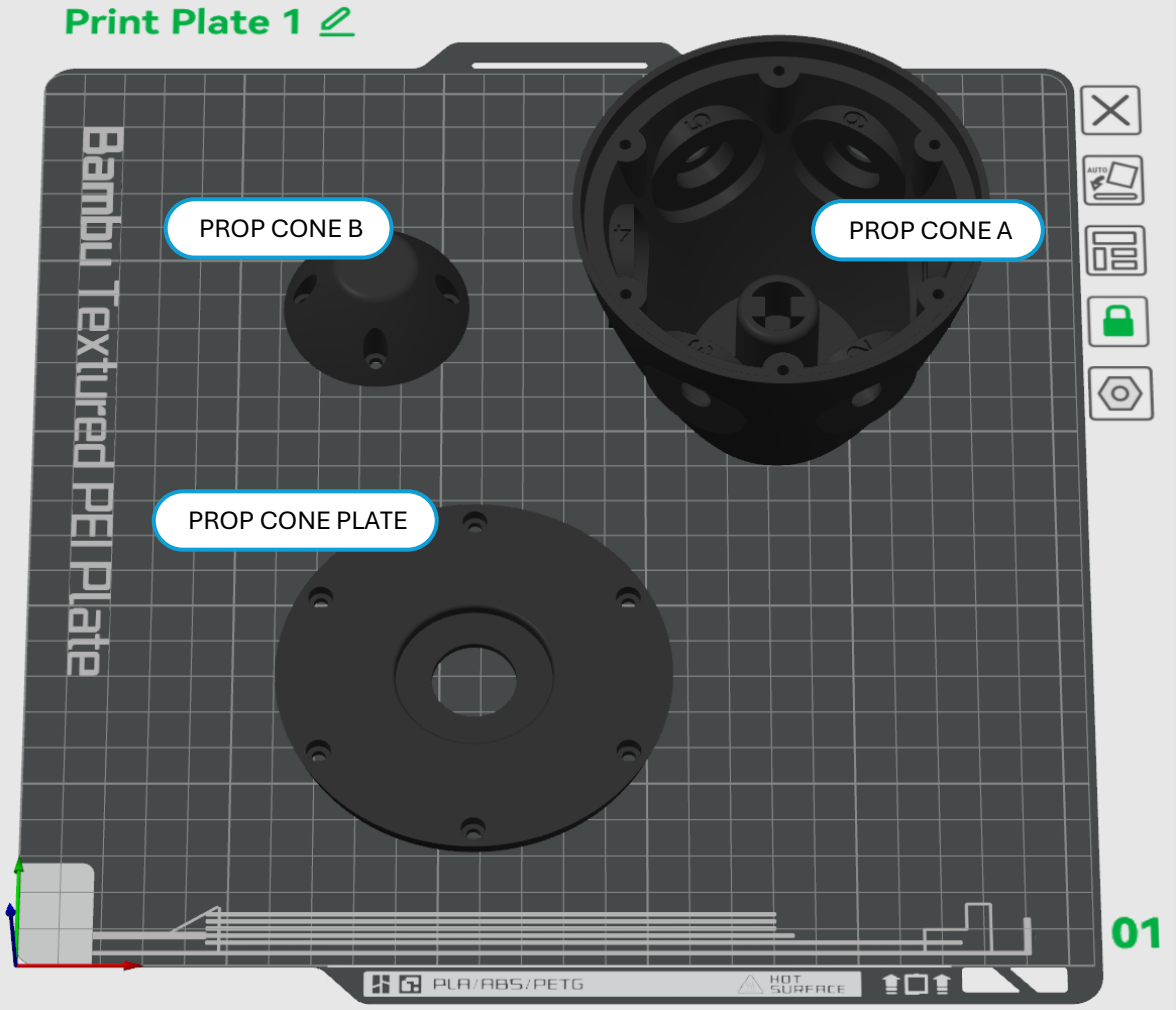

Recommended Slicer Settings:

Layer Height:	0.2
Infill:	20%
Support:	Yes/Tree

- Only on **“PROP CONE A”**

Brim:	Optional
AUX Fan:	Off
Print Time:	4h1m
Total Filament:	37.93m 115g

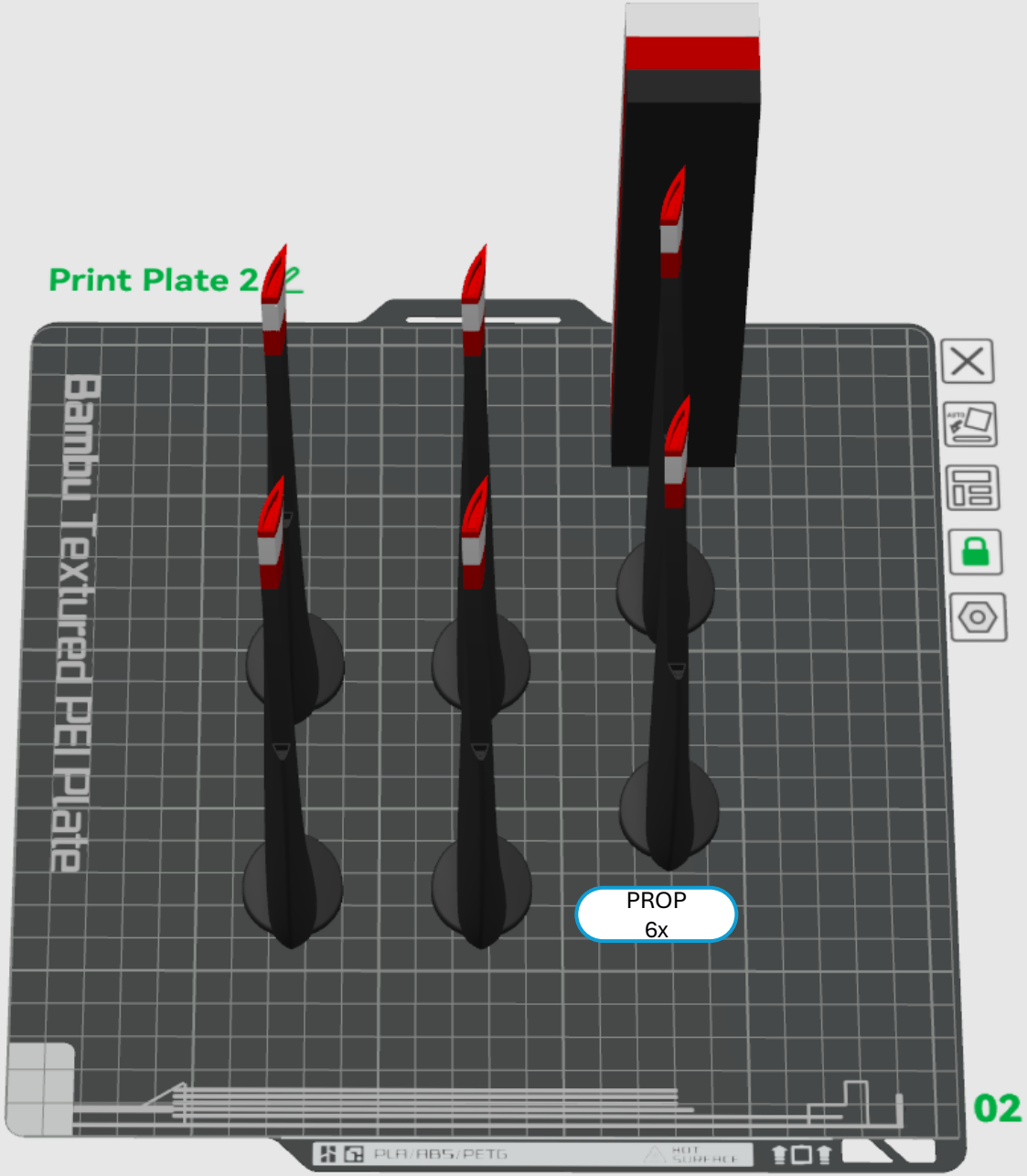

Recommended Slicer Settings:

Layer Height:	0.2	
Infill:	20%	
Support:	No	
Brim:	Optional	
AUX Fan:	Off	
Print Time:	4h18m	
Total Filament:	37.5m	113g

Non-Multi-Material 3D Printers - Colour Change Height:

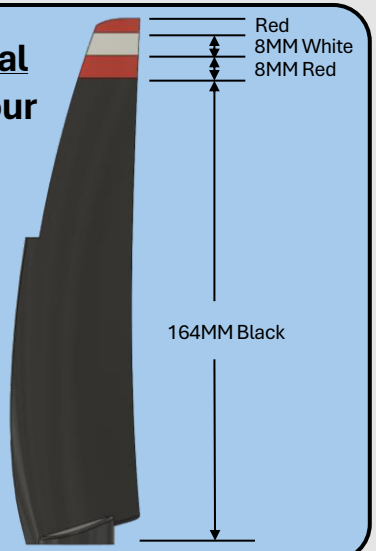

Multi-Material Option Available

PROP
MULTI_MATERIAL.3mf

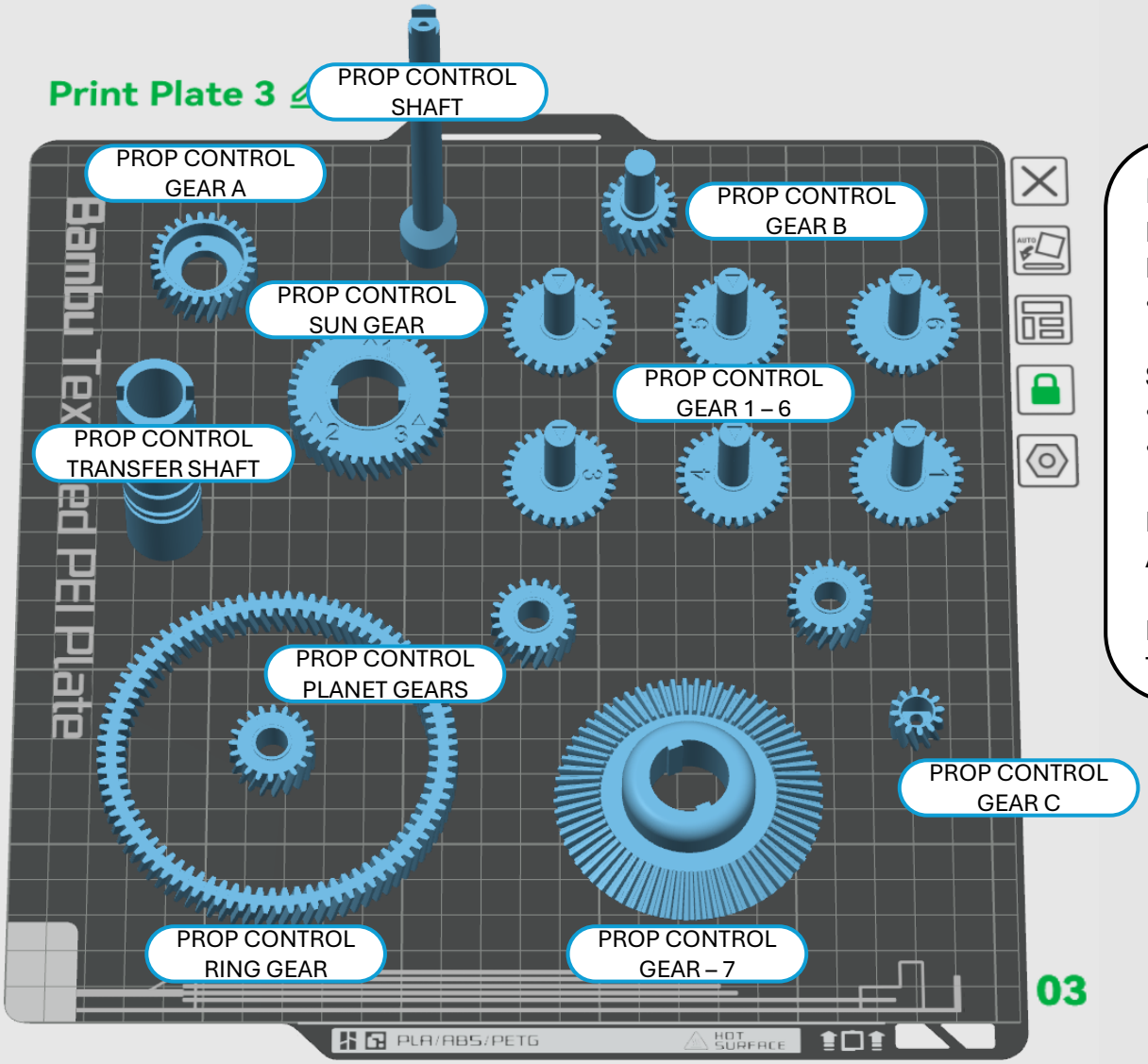

Recommended Slicer Settings:

Layer Height:	0.2	
Infill:	20%	
• **80%** On **"PROP CONTROL GEARS 1 – 6"**		
Support:	Tree/Only on:	
• **"PROP CONTROL TRANSFER SHAFT"**		
• **"PROP CONTROL SHAFT"**		
Brim:	Optional	
AUX Fan:	Off	
Print Time:	6h13m	
Total Filament:	32.72m	99.16g

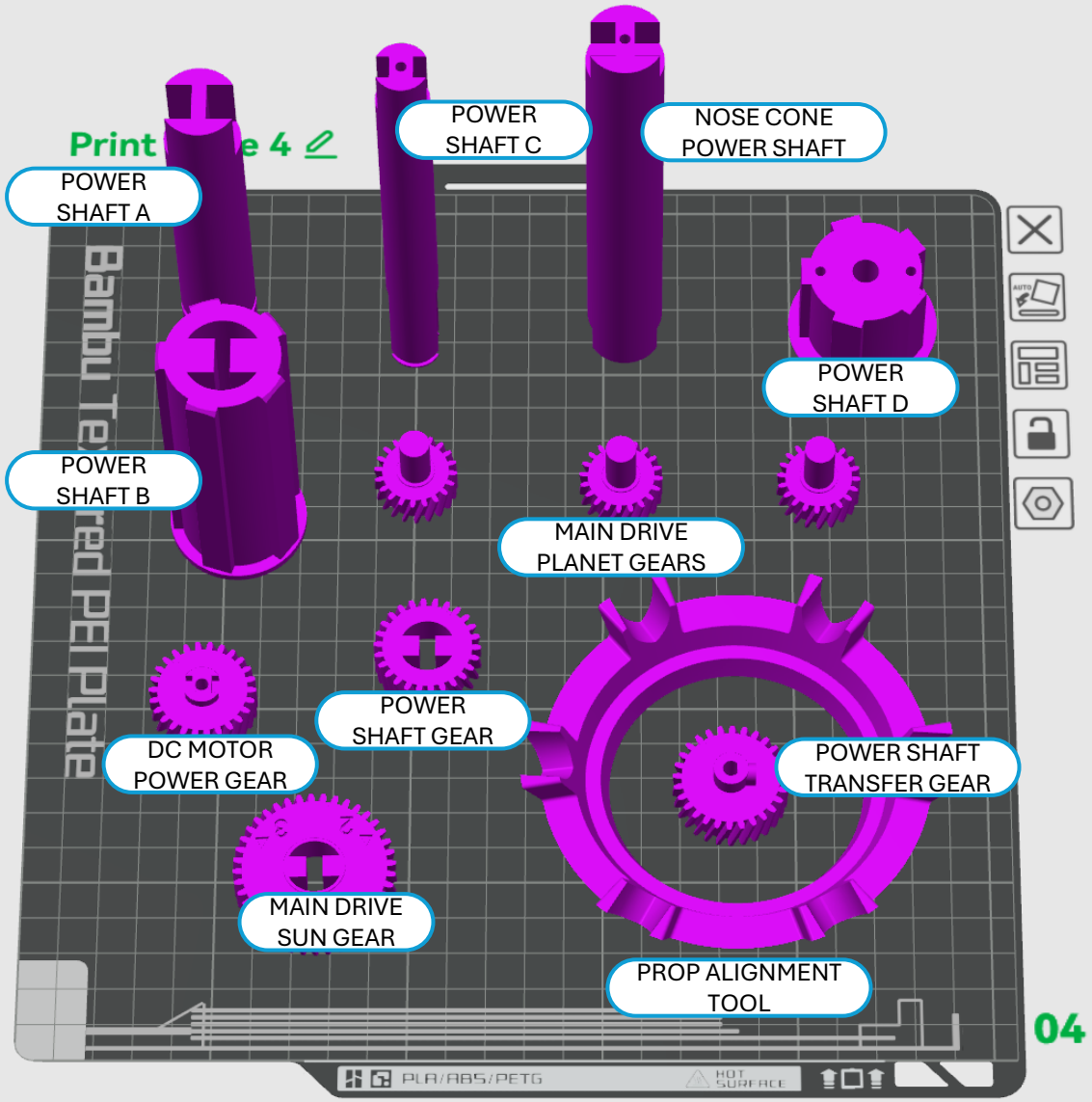

Recommended Slicer Settings:

Layer Height:	0.2
Infill:	20%
Support:	Tree/Only on:

- **“NOSE CONE POWER SHAFT”**
- **“POWER SHAFT A”**
- **“POWER SHAFT B”**
- **“POWER SHAFT C”**

Brim:	Optional	
AUX Fan:	Off	
Print Time:	6h5m	
Total Filament:	48.02m	145.5g

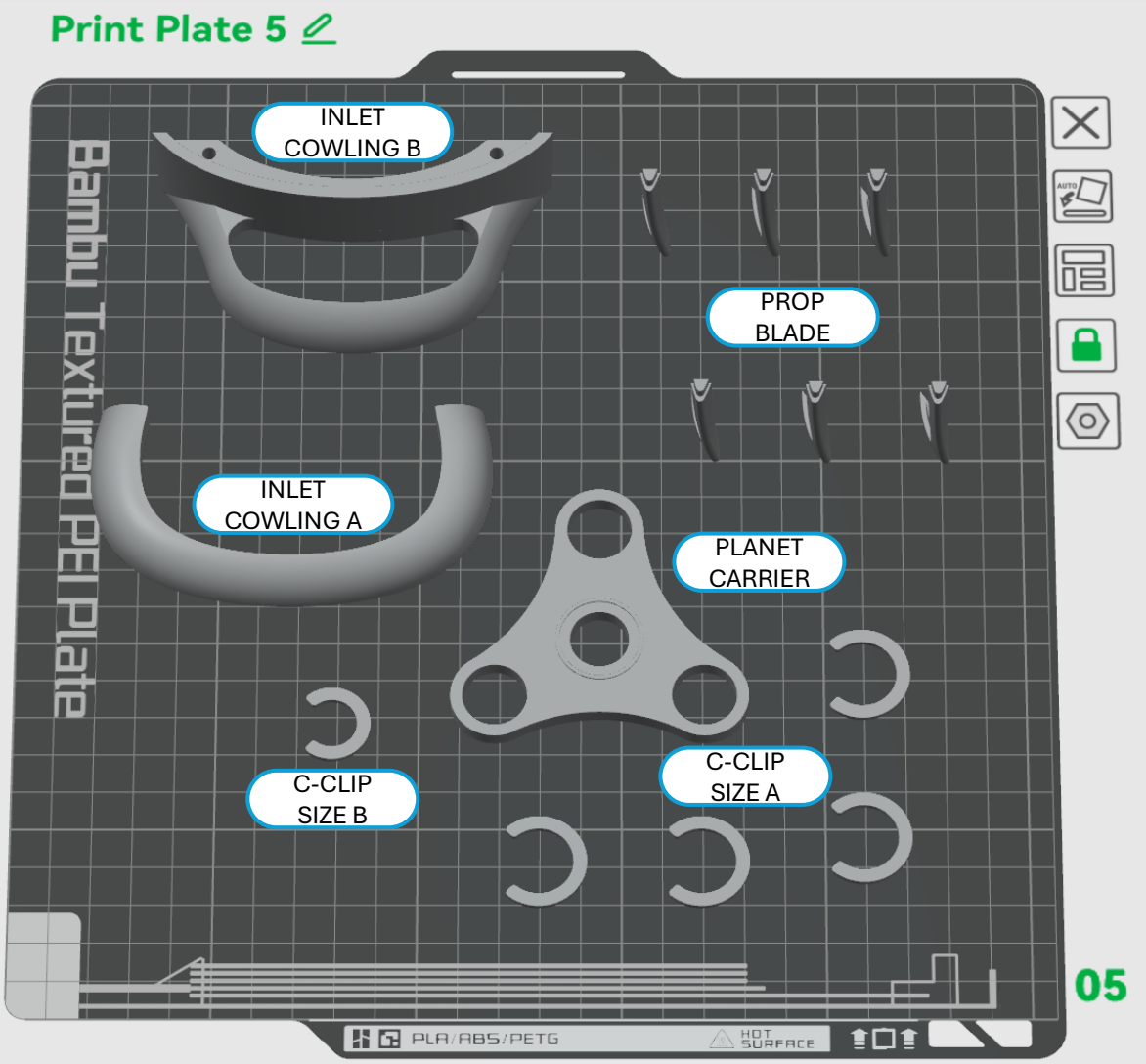

Recommended Slicer Settings:

Layer Height:	0.2	
Infill:	20%	
Support:	Yes/Tree	
• Only on: **"BLADE INSERTS"**		
Brim:	Optional	
AUX Fan:	Off	
Print Time:	2h8m	
Total Filament:	15.89m	48.17g

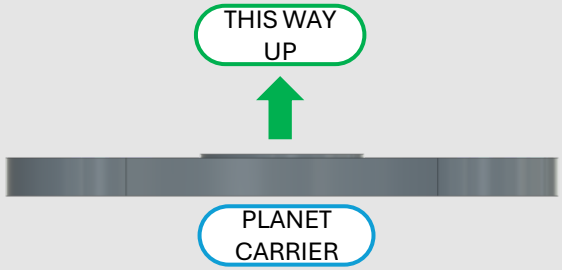

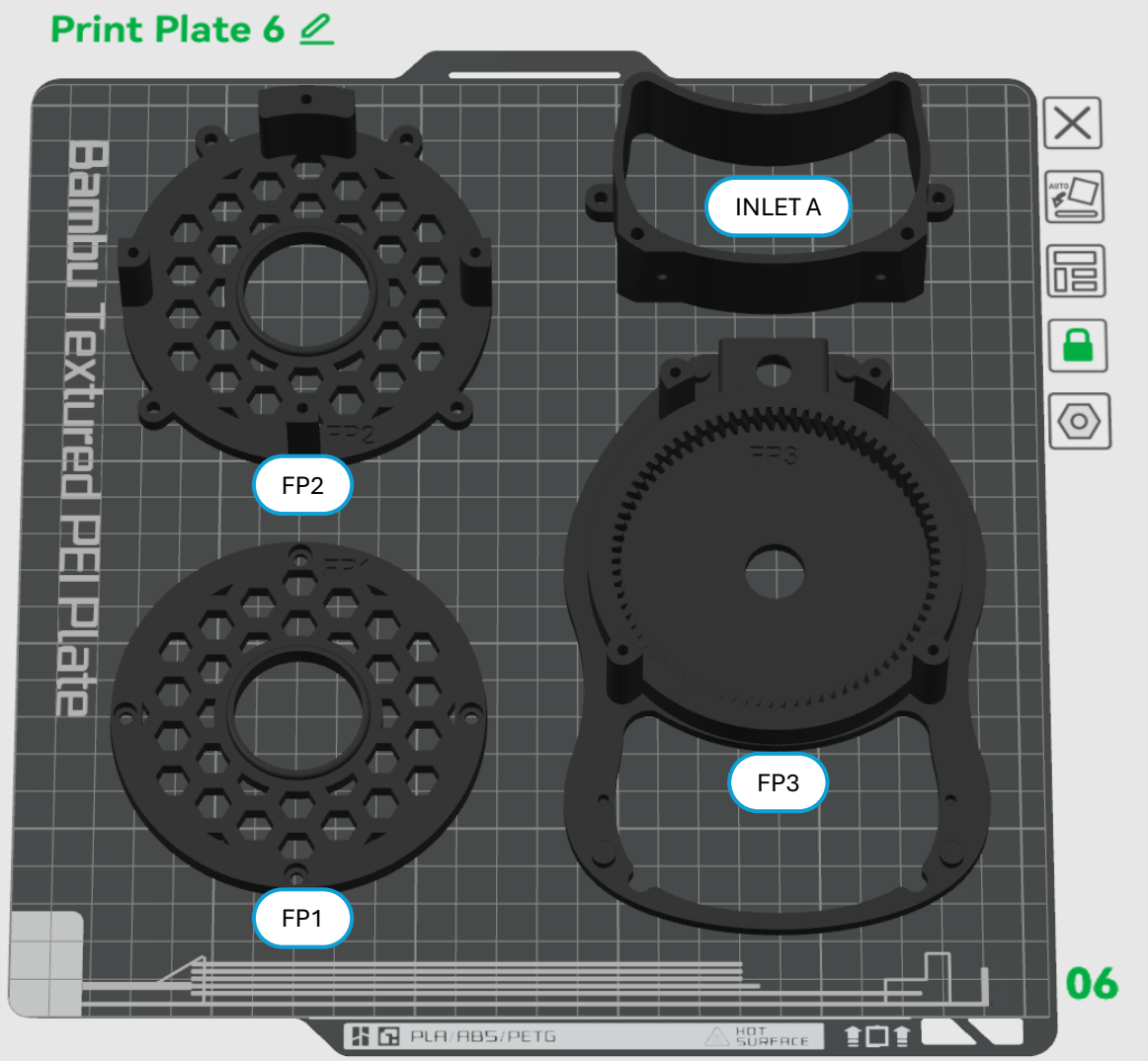

Recommended Slicer Settings:

Layer Height:	0.2	
Infill:	20%	
Support:	No	
Brim:	Optional	
AUX Fan:	Off	
Print Time:	4h18m	
Total Filament:	37.5m	113g

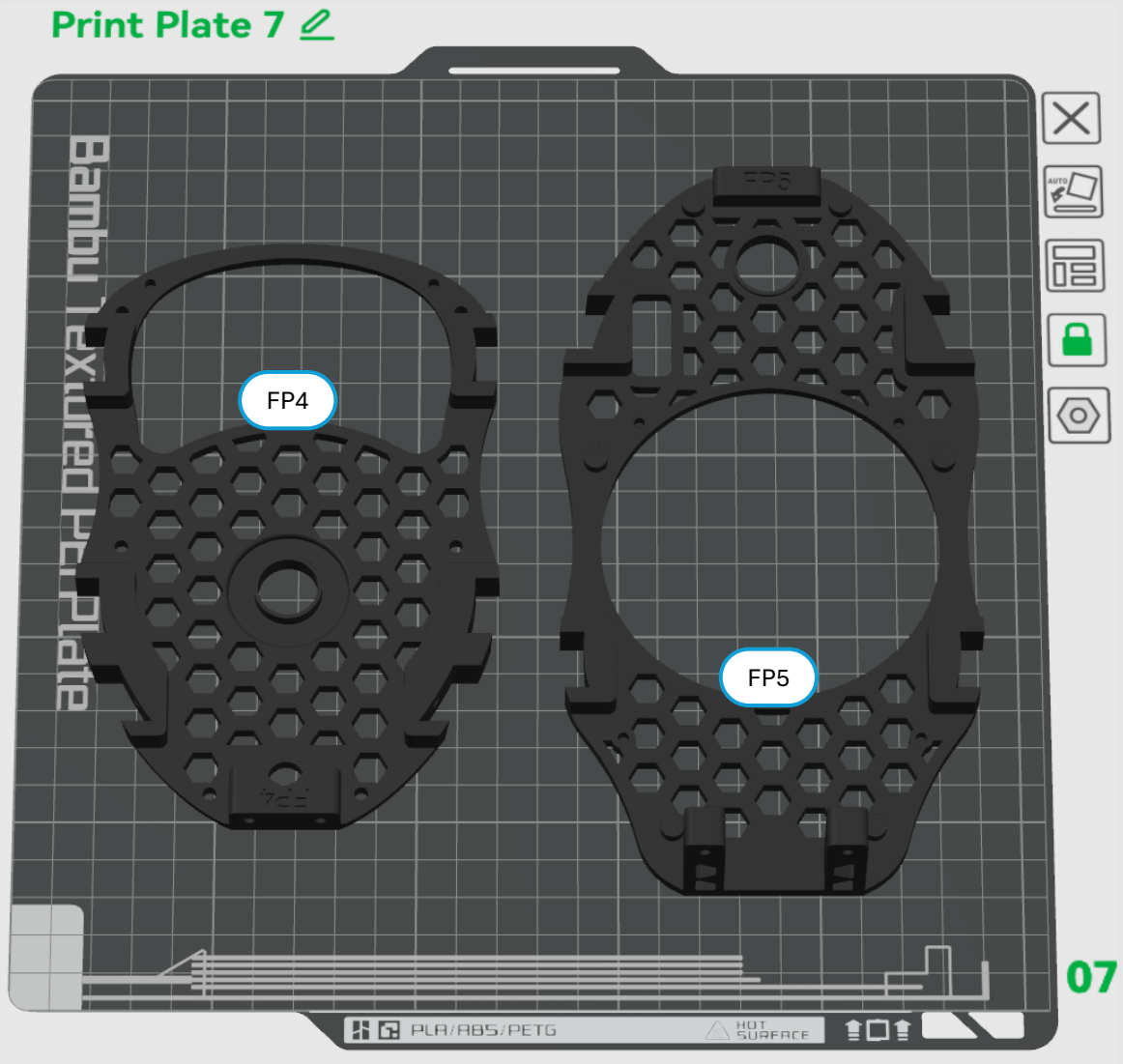

Recommended Slicer Settings:

Layer Height:	0.2
Infill:	20%
Support:	No
Brim:	Optional
AUX Fan:	Off
Print Time:	3h7m
Total Filament:	24.51m 74.3g

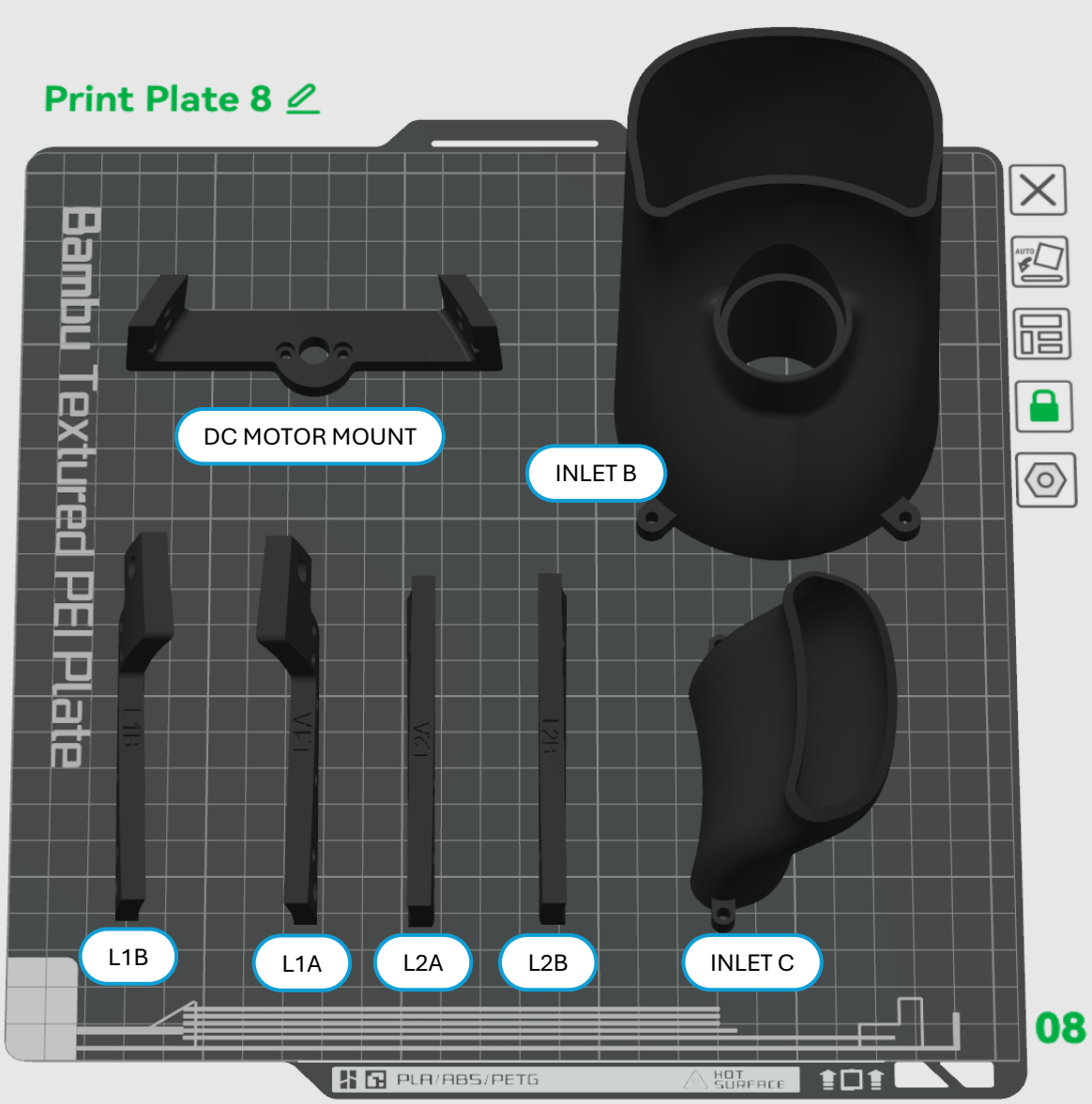

Recommended Slicer Settings:

Layer Height:	0.2
Infill:	20%
Support:	Yes/Tree

- **“L1A”**
- **“L1B”**

Brim:	Optional
AUX Fan:	Off
Print Time:	3h47m
Total Filament:	44.28m 134.20g

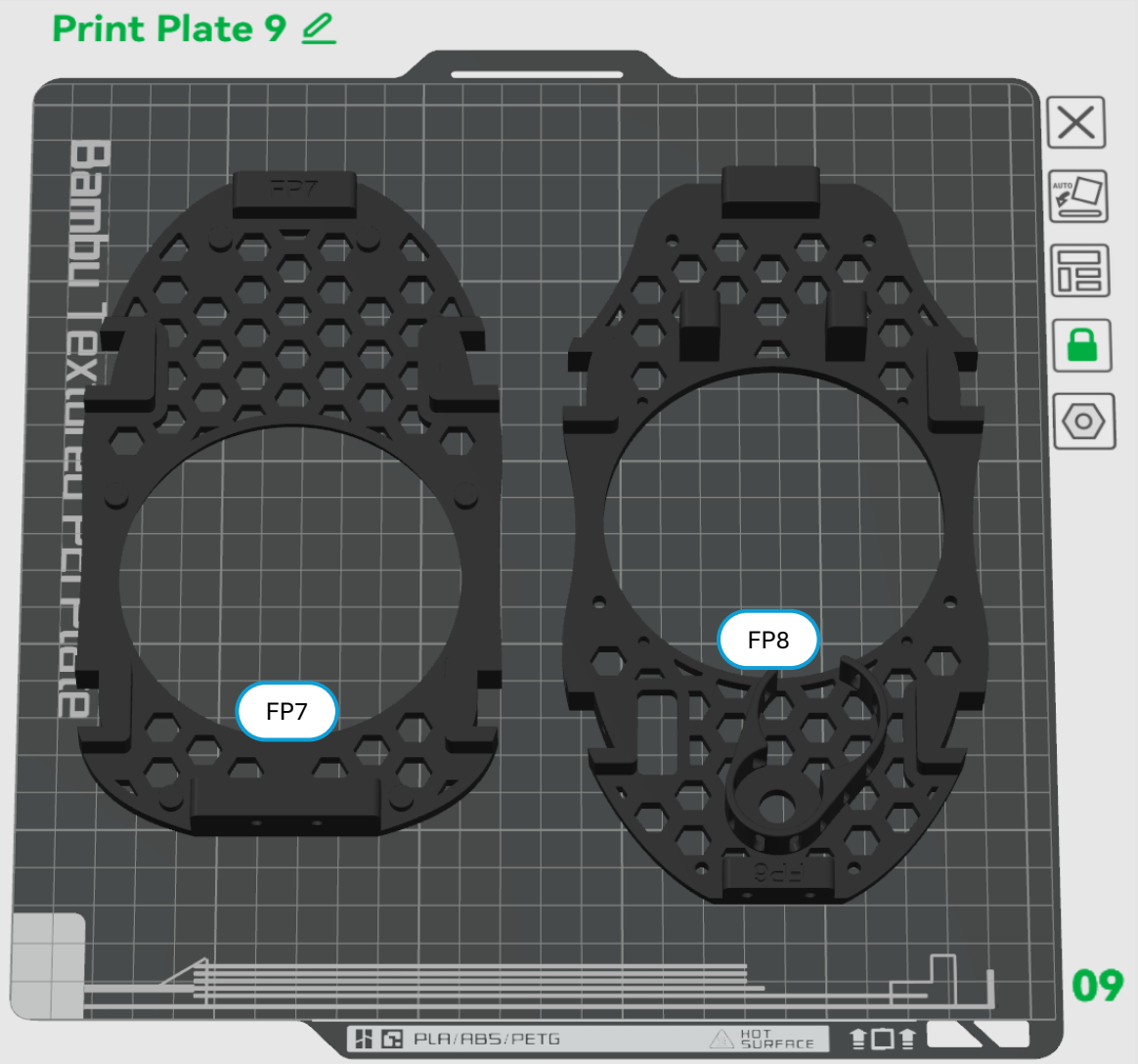

Recommended Slicer Settings:

Layer Height:	0.2
Infill:	20%
Support:	No
Brim:	Optional
AUX Fan:	Off
Print Time:	3h15m
Total Filament:	26.67m 80.84g

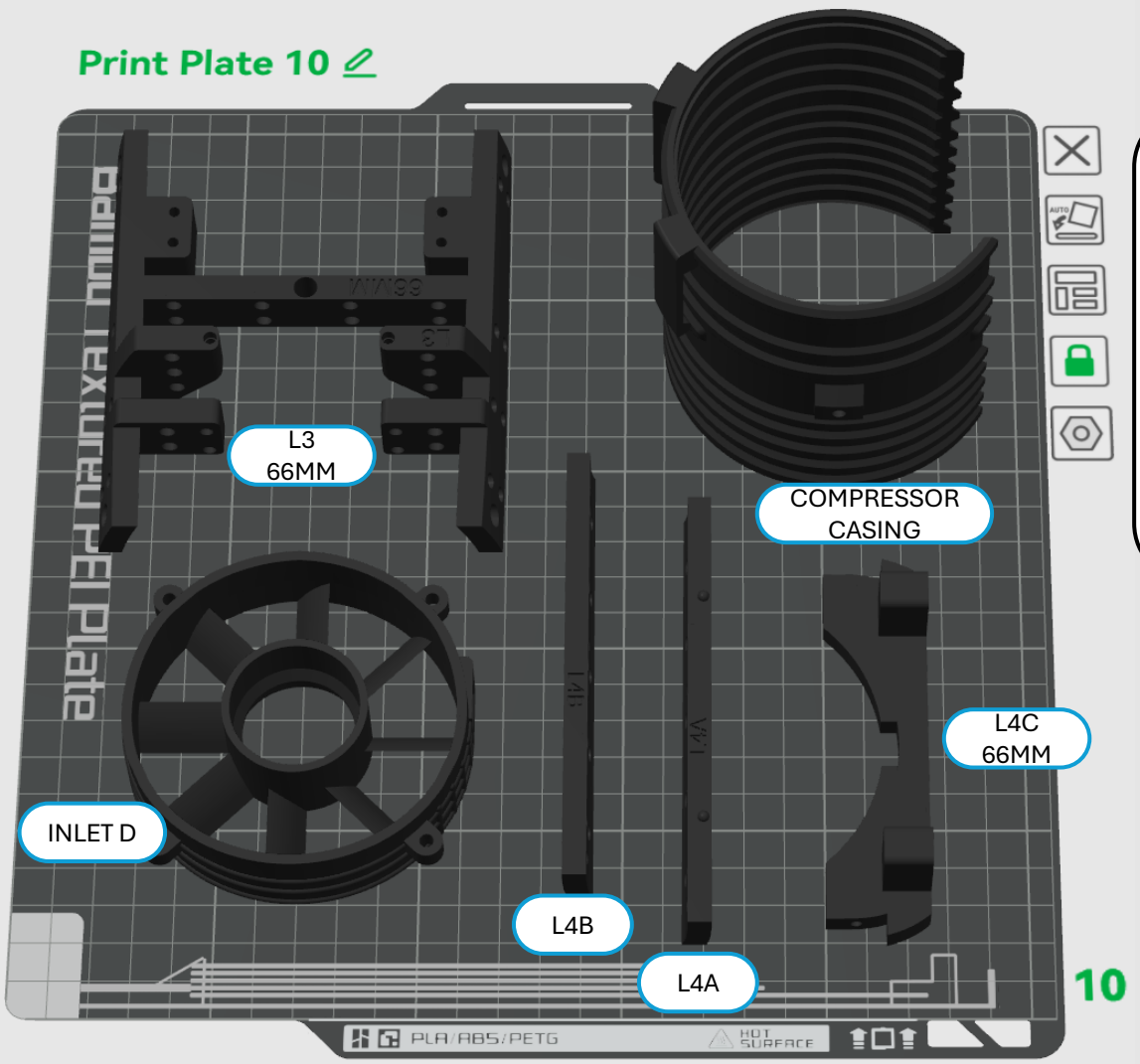

Recommended Slicer Settings:

Layer Height:	0.2
Infill:	20%
Support:	Yes/Tree
• Only on **“INLET D”**	
Brim:	Optional
AUX Fan:	Off
Print Time:	4h37m
Total Filament:	48.13m 145.88g

Print Plate 11

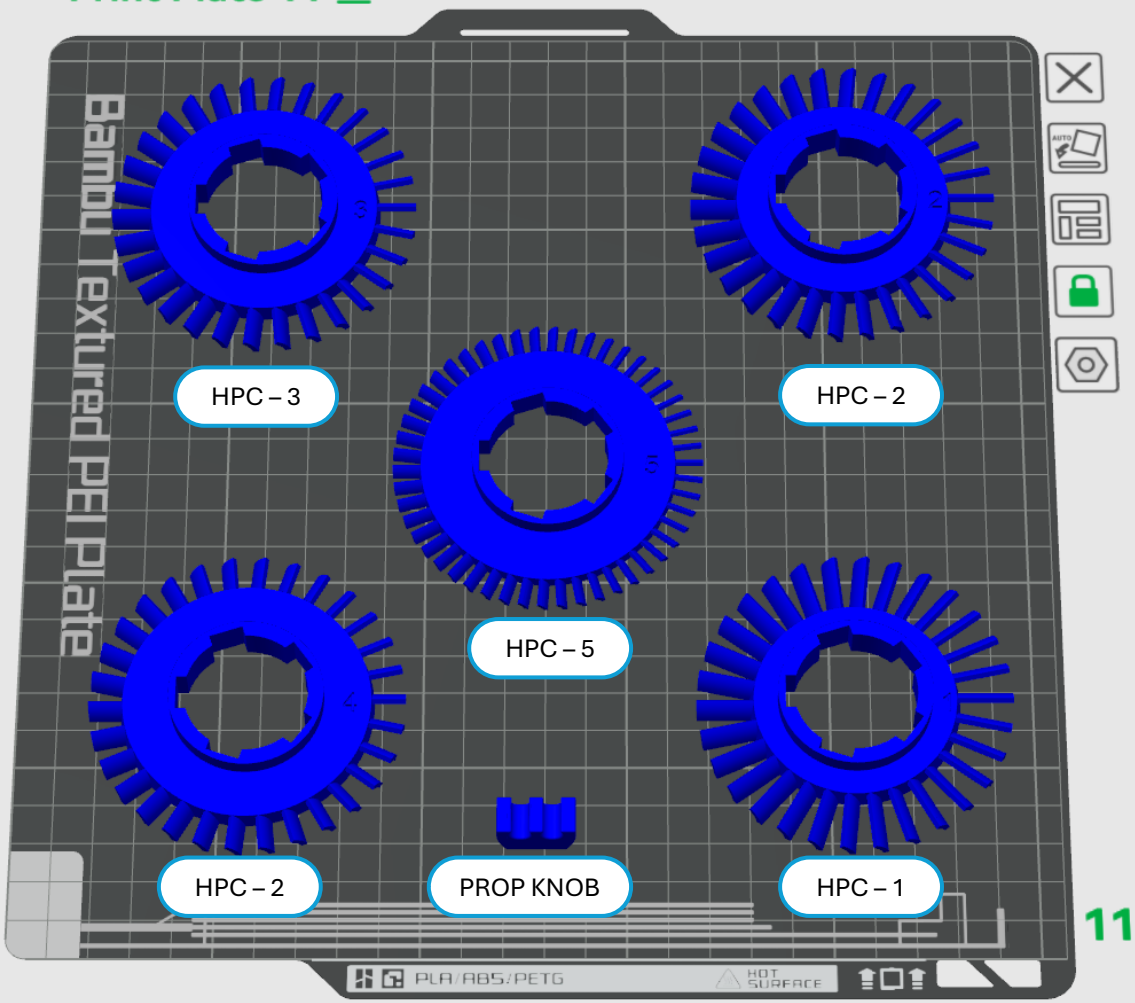

Recommended Slicer Settings:

Layer Height:	0.2
Infill:	20%
Support:	Yes/Tree
• **“PROP KNOB”**	
Brim:	Optional
AUX Fan:	Off
Print Time:	1h52m
Total Filament:	15.39m 46.64g

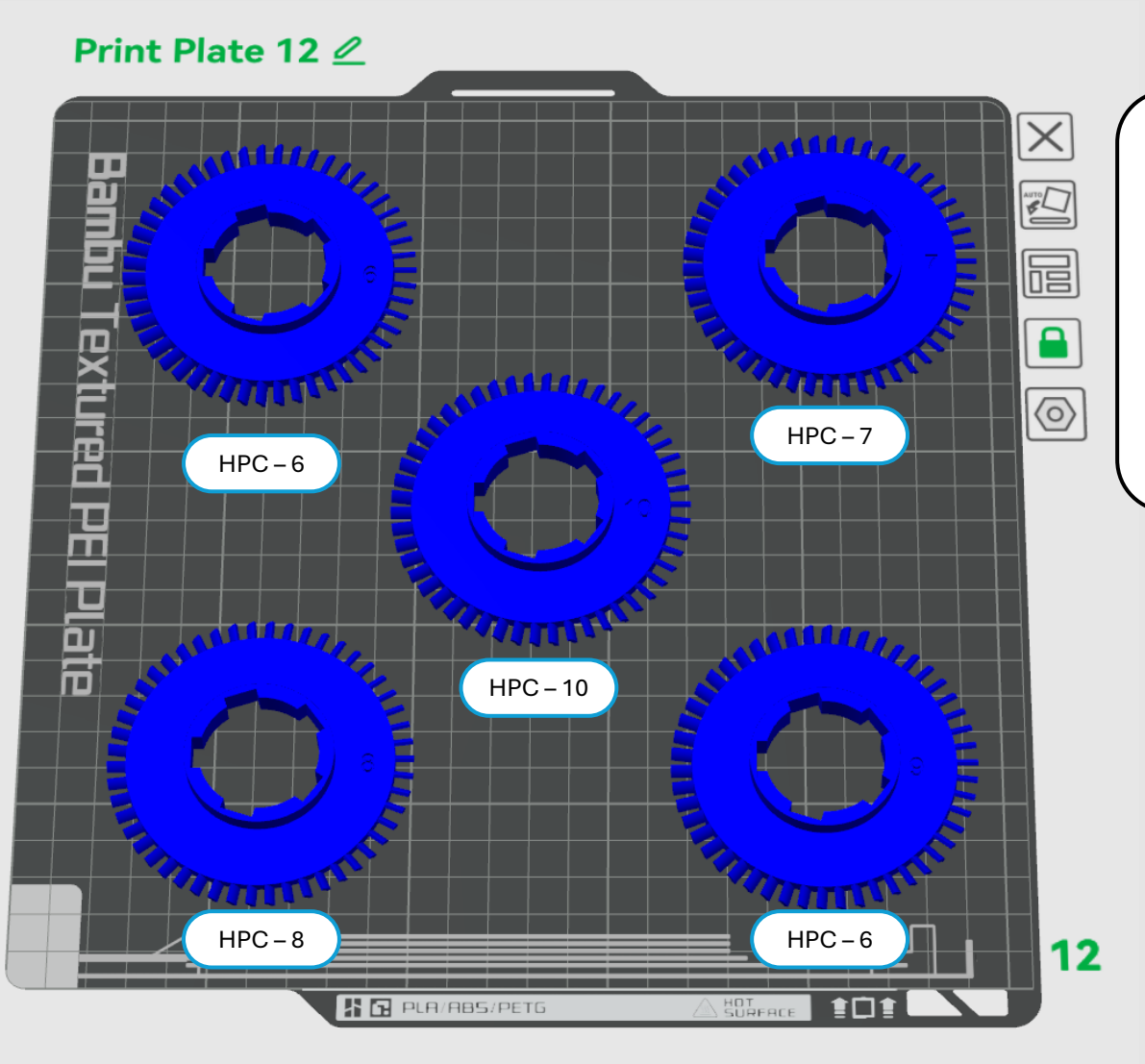

Recommended Slicer Settings:

Layer Height:	0.2
Infill:	20%
Support:	No
Brim:	Optional
AUX Fan:	Off
Print Time:	1h36m
Total Filament:	13.25m 40.16g

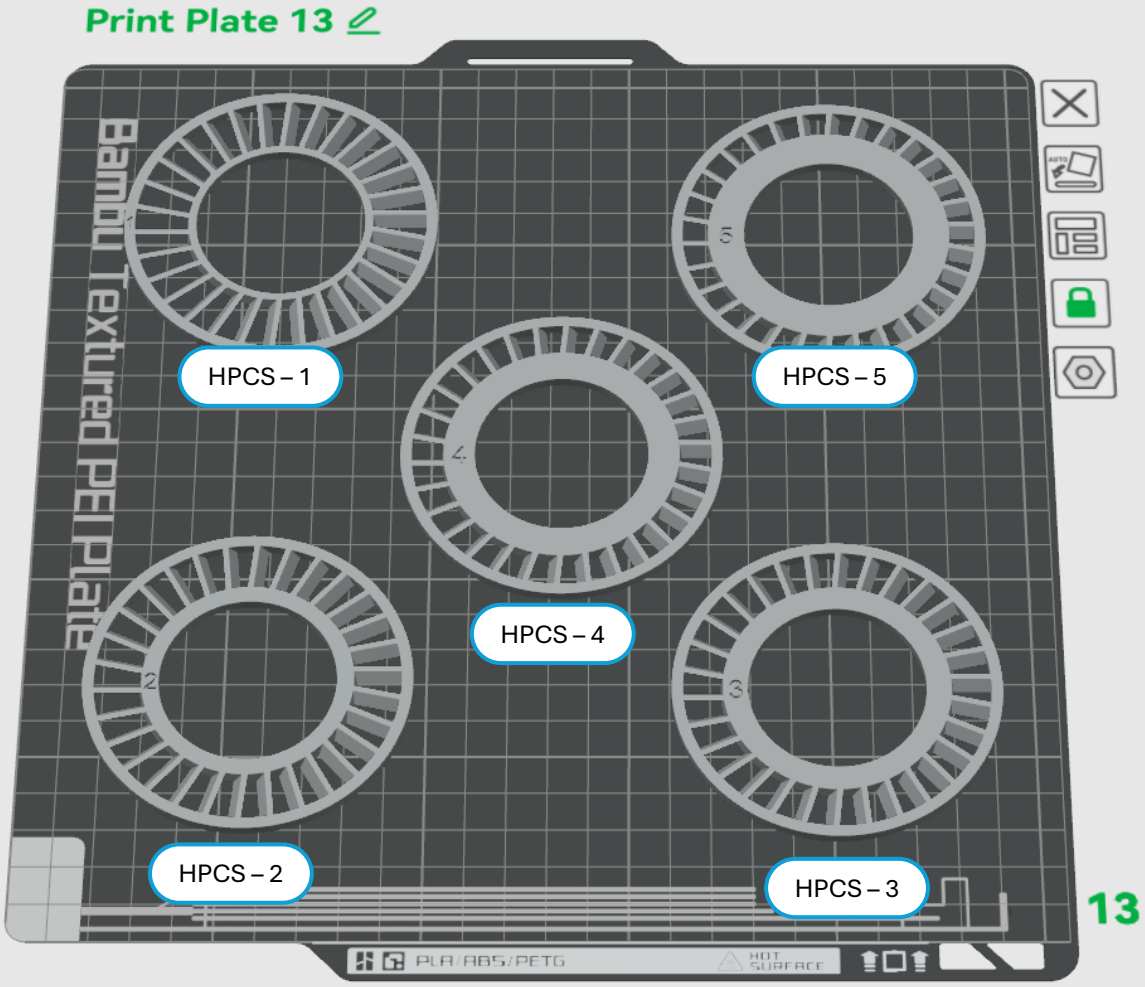

Recommended Slicer Settings:

Layer Height:	0.2
Infill:	20%
Support:	No
Brim:	Optional
AUX Fan:	Off
Print Time:	1h52m
Total Filament:	18.16m 53.03g

Print Plate 14

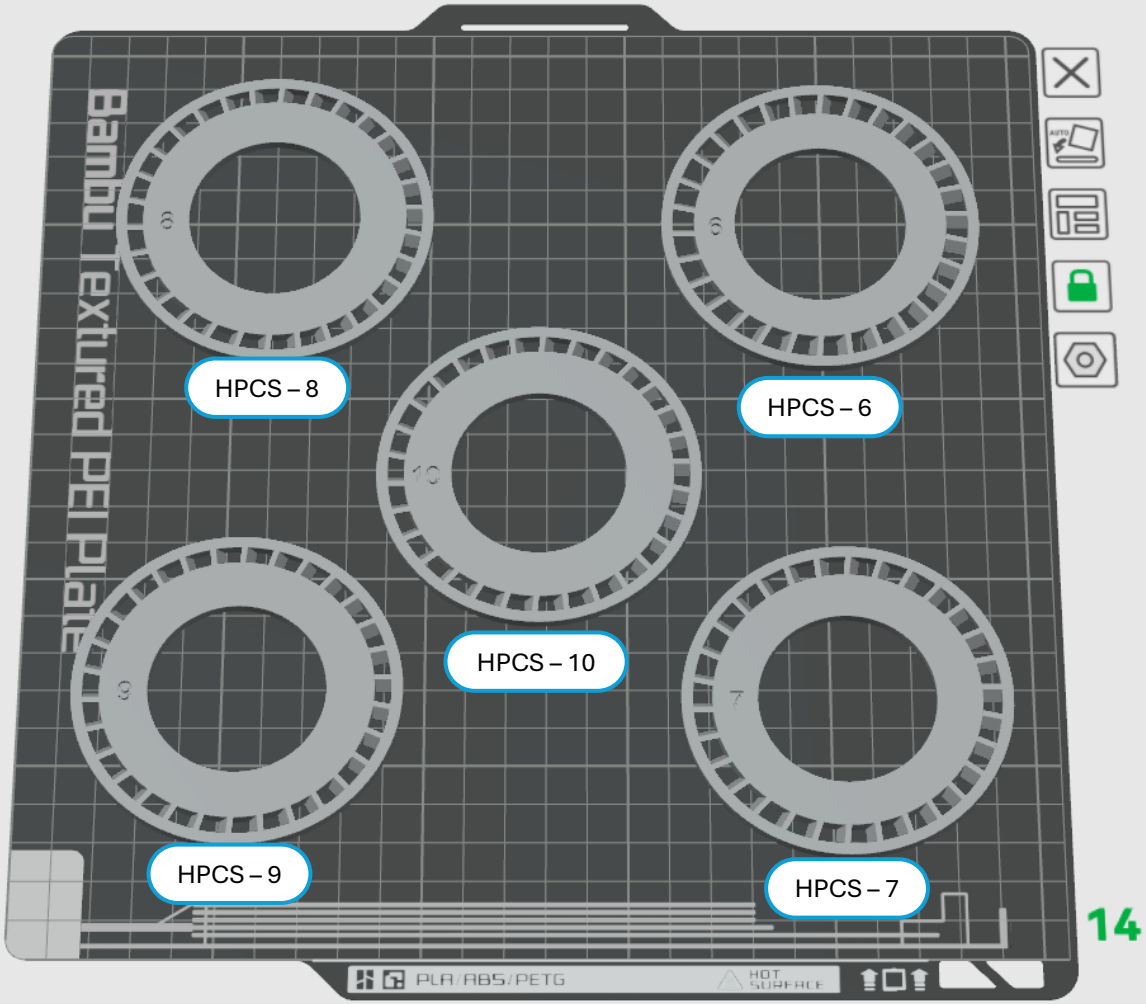

Recommended Slicer Settings:

Layer Height:	0.2
Infill:	20%
Support:	No
Brim:	Optional
AUX Fan:	Off
Print Time:	1h21m
Total Filament:	11.56m 35.02g

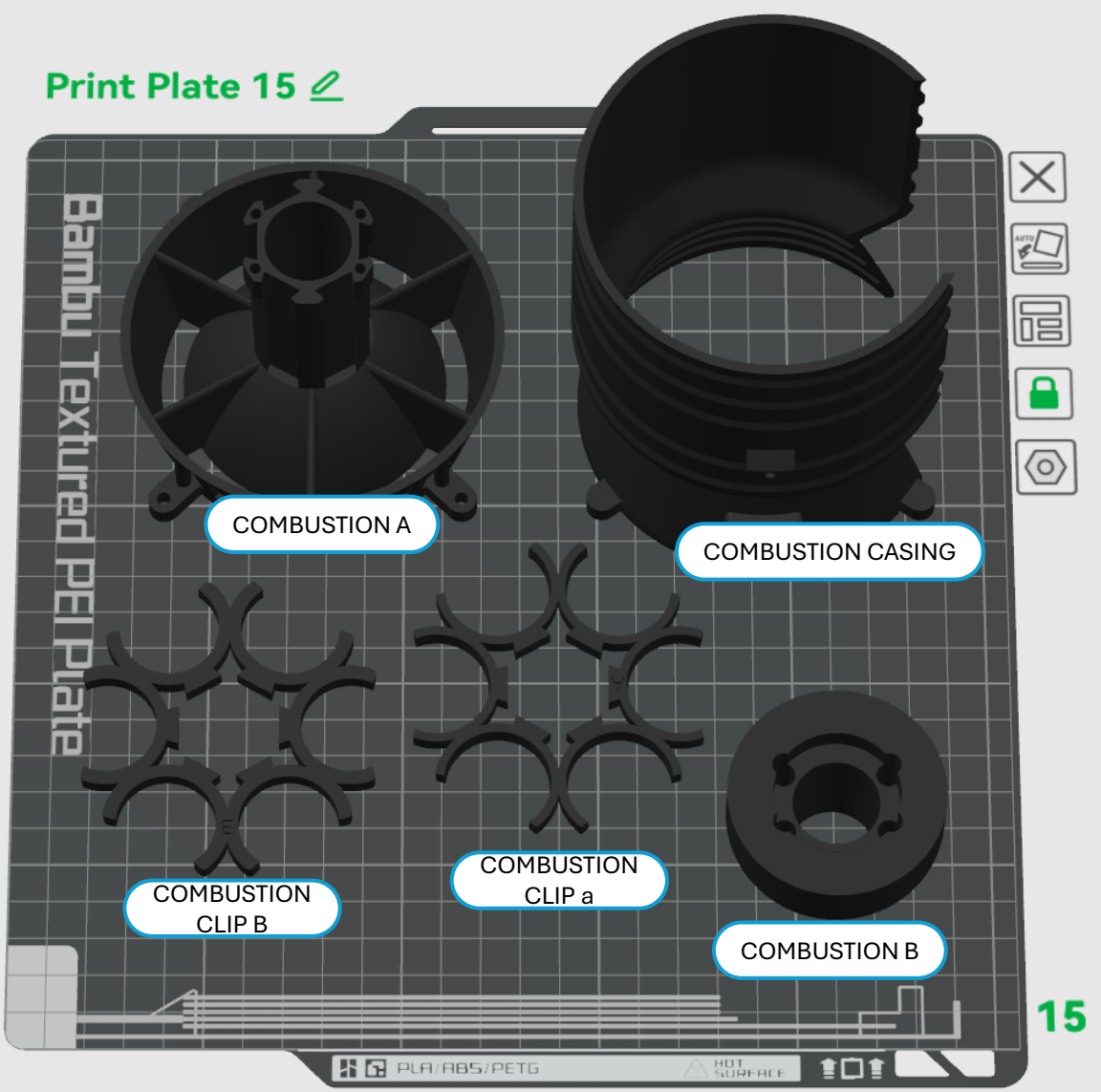

Recommended Slicer Settings:

Layer Height:	0.2
Infill:	20%
Support:	Yes/Tree/Only:
Only on **"COMBUSTION A"**	
Brim:	Optional
AUX Fan:	Off
Print Time:	5h29m
Total Filament:	61.63m 186.78g

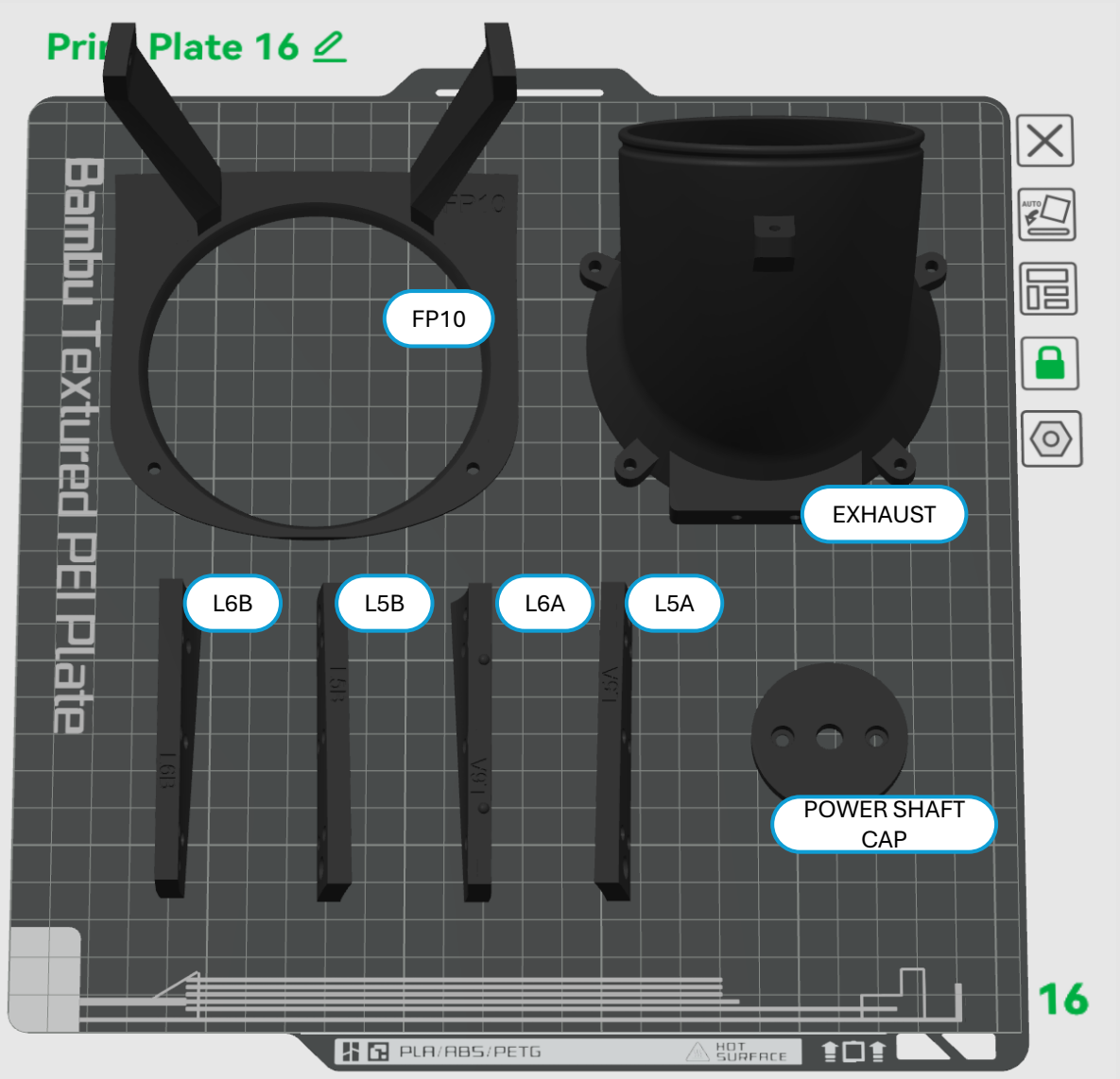

Recommended Slicer Settings:

Layer Height:	0.2
Infill:	20%
Support:	No
Brim:	Optional
AUX Fan:	Off
Print Time:	3h47m
Total Filament:	39.31m 119.14g

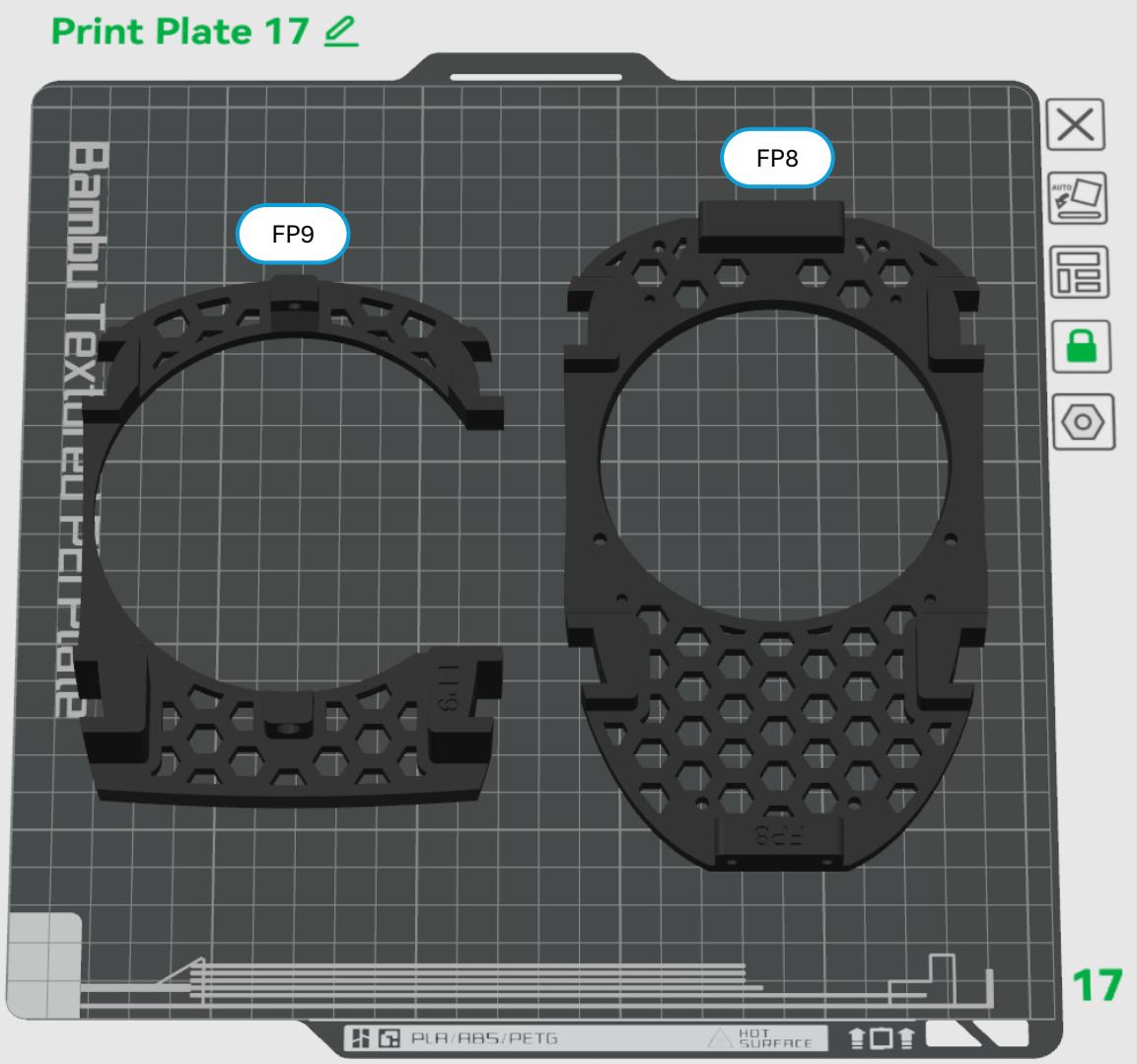

Recommended Slicer Settings:

Layer Height:	0.2
Infill:	20%
Support:	No
Brim:	Optional
AUX Fan:	Off
Print Time:	2h30m
Total Filament:	20.76m 62.92g

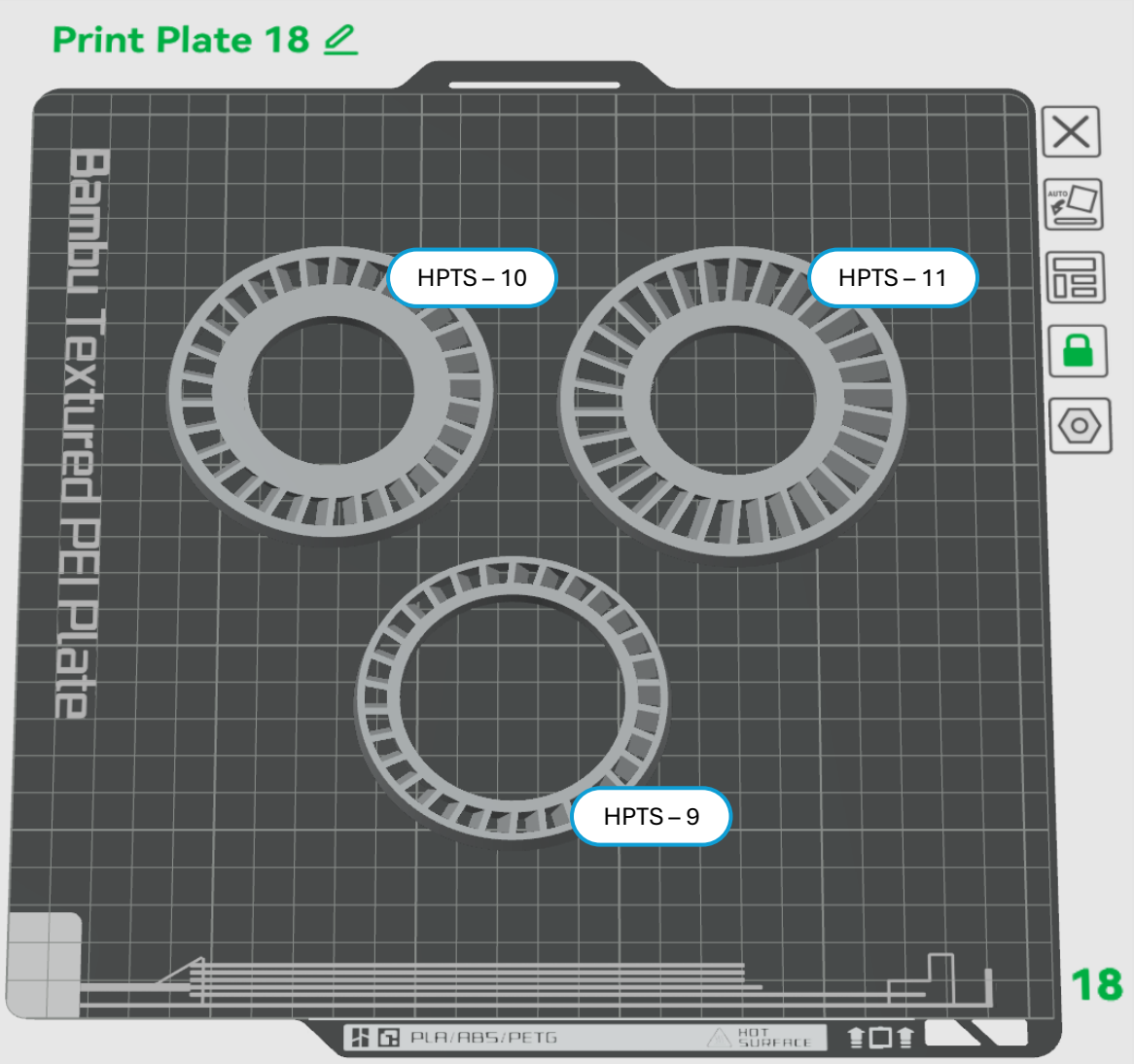

Recommended Slicer Settings:

Layer Height:	0.2
Infill:	20%
Support:	No
Brim:	Optional
AUX Fan:	Off
Print Time:	1h16m
Total Filament:	10.00m 30.31g

Print Plate 19

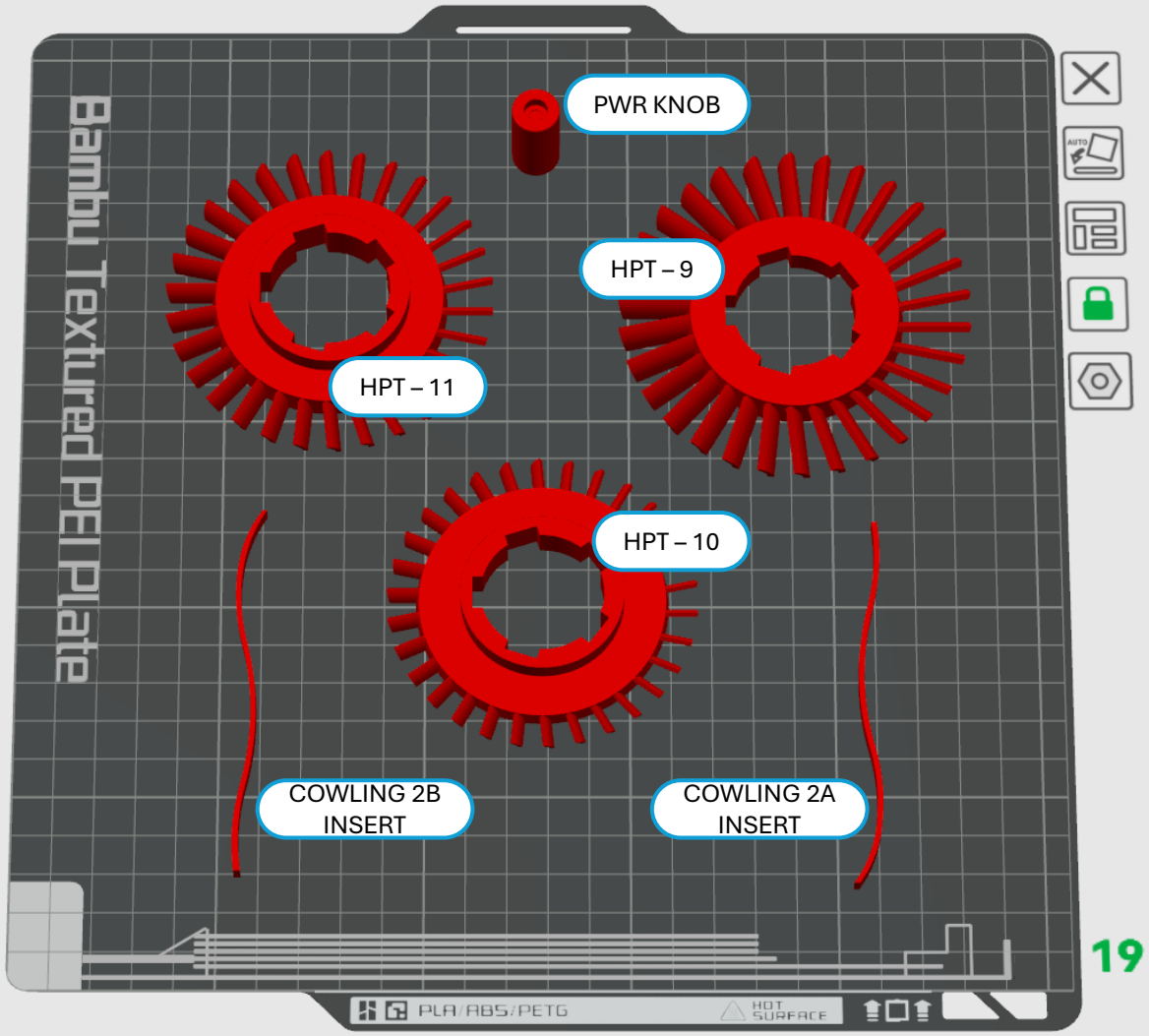

Recommended Slicer Settings:

Layer Height:	0.2
Infill:	20%
Support:	No
Brim:	Optional
AUX Fan:	Off
Print Time:	1h31m
Total Filament:	14.16m 42.93g

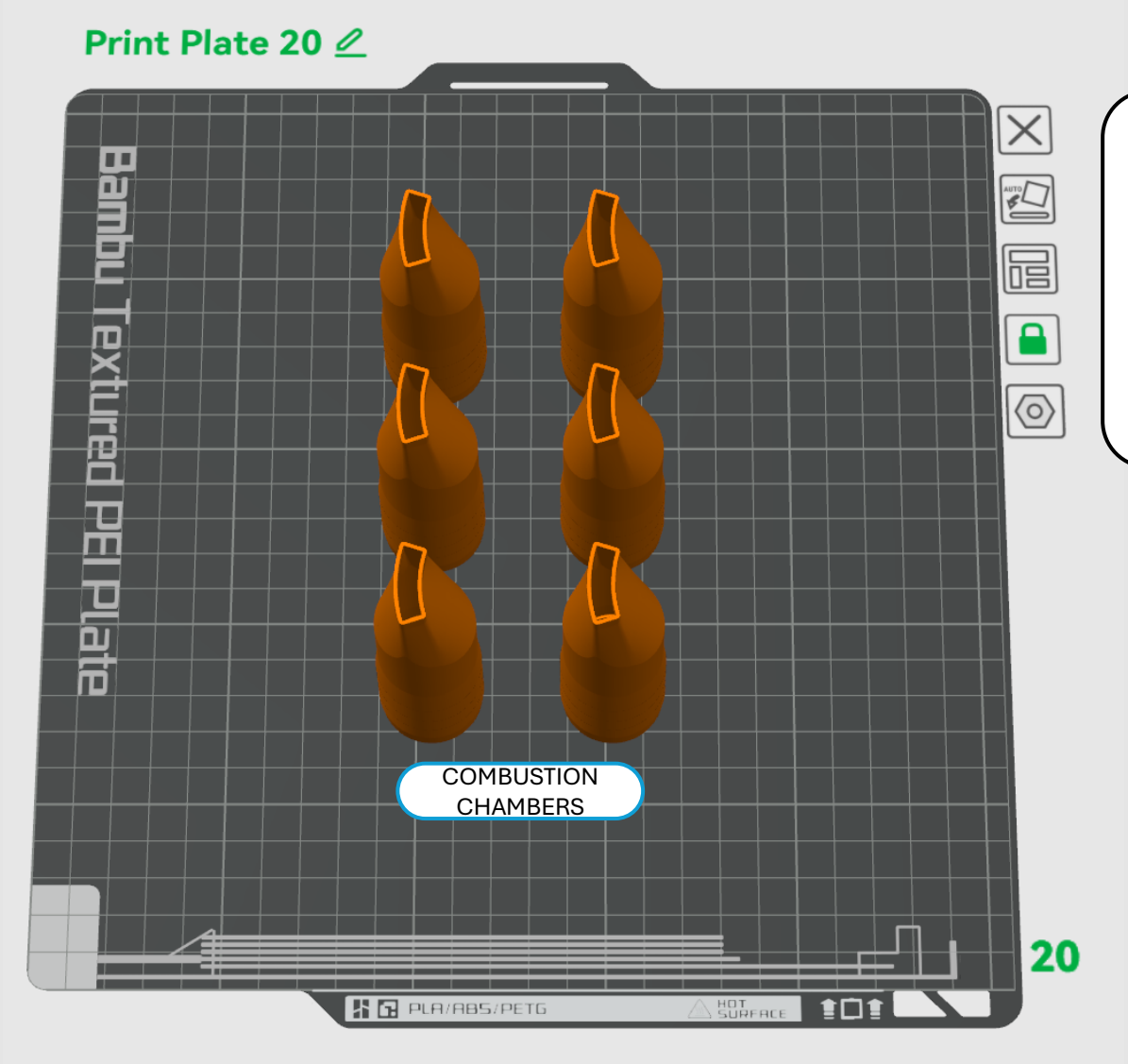

Recommended Slicer Settings:

Layer Height:	0.2
Infill:	20%
Support:	No
Brim:	Optional
AUX Fan:	Off
Print Time:	1h54m
Total Filament:	21.18m 64.20g

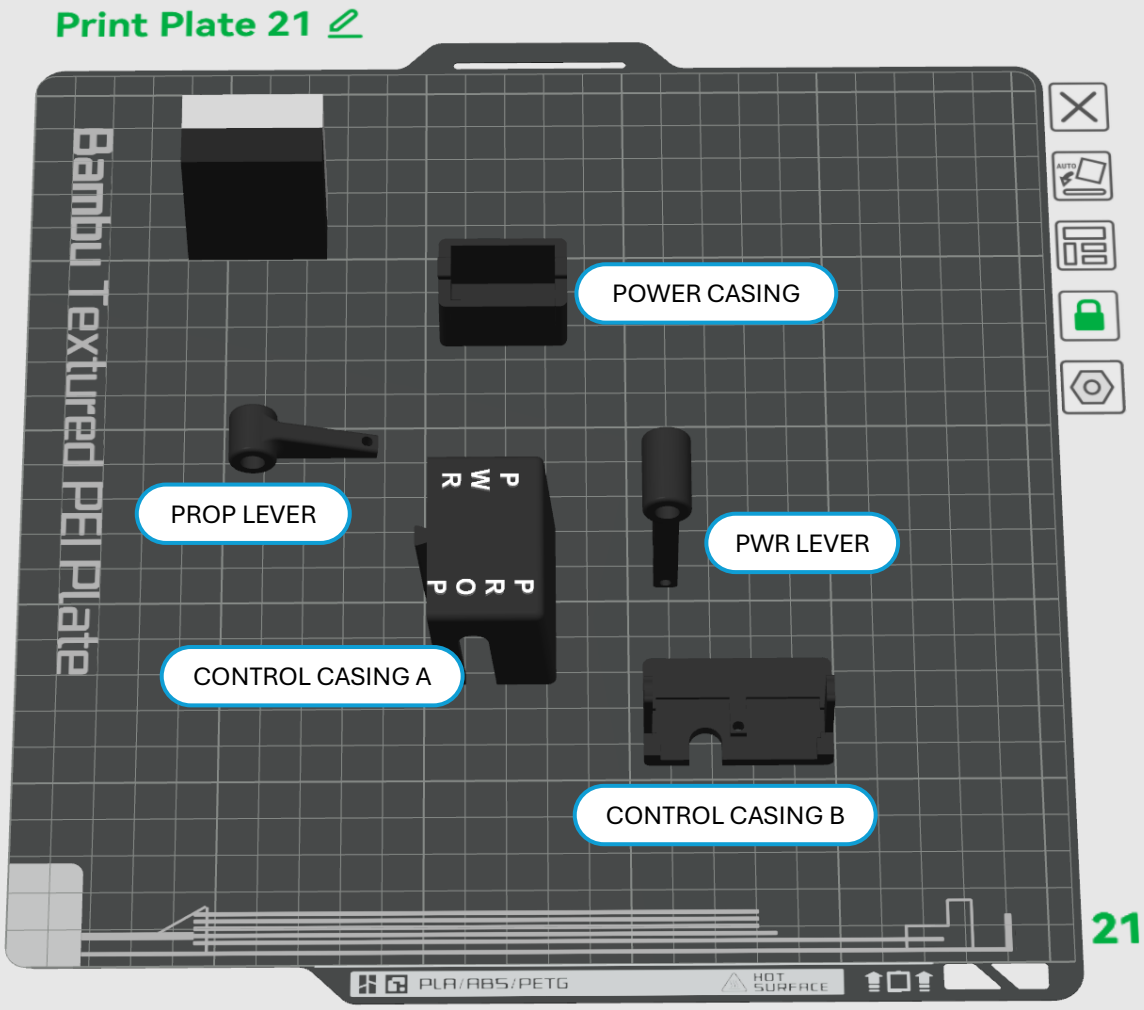

Recommended Slicer Settings:

Layer Height:	0.2
Infill:	20%
Support:	Yes/Tree
Brim:	Optional
AUX Fan:	Off
Colour Change:	Yes/Black/White
Print Time:	2h13m
Total Filament:	25.82m 78.25g

Non-Multi-Material 3D Printers Colour Change Height:

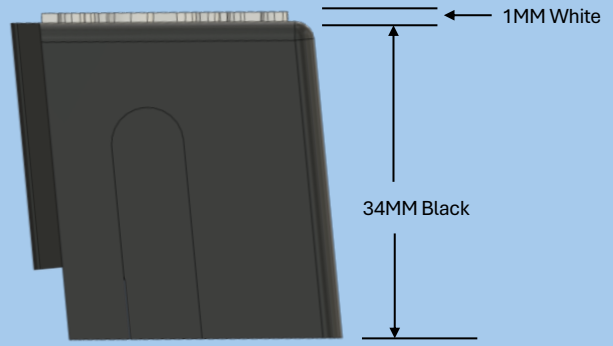

Multi-Material Option Available

CONTROLS CASING MULTI-MATERIAL.3mf

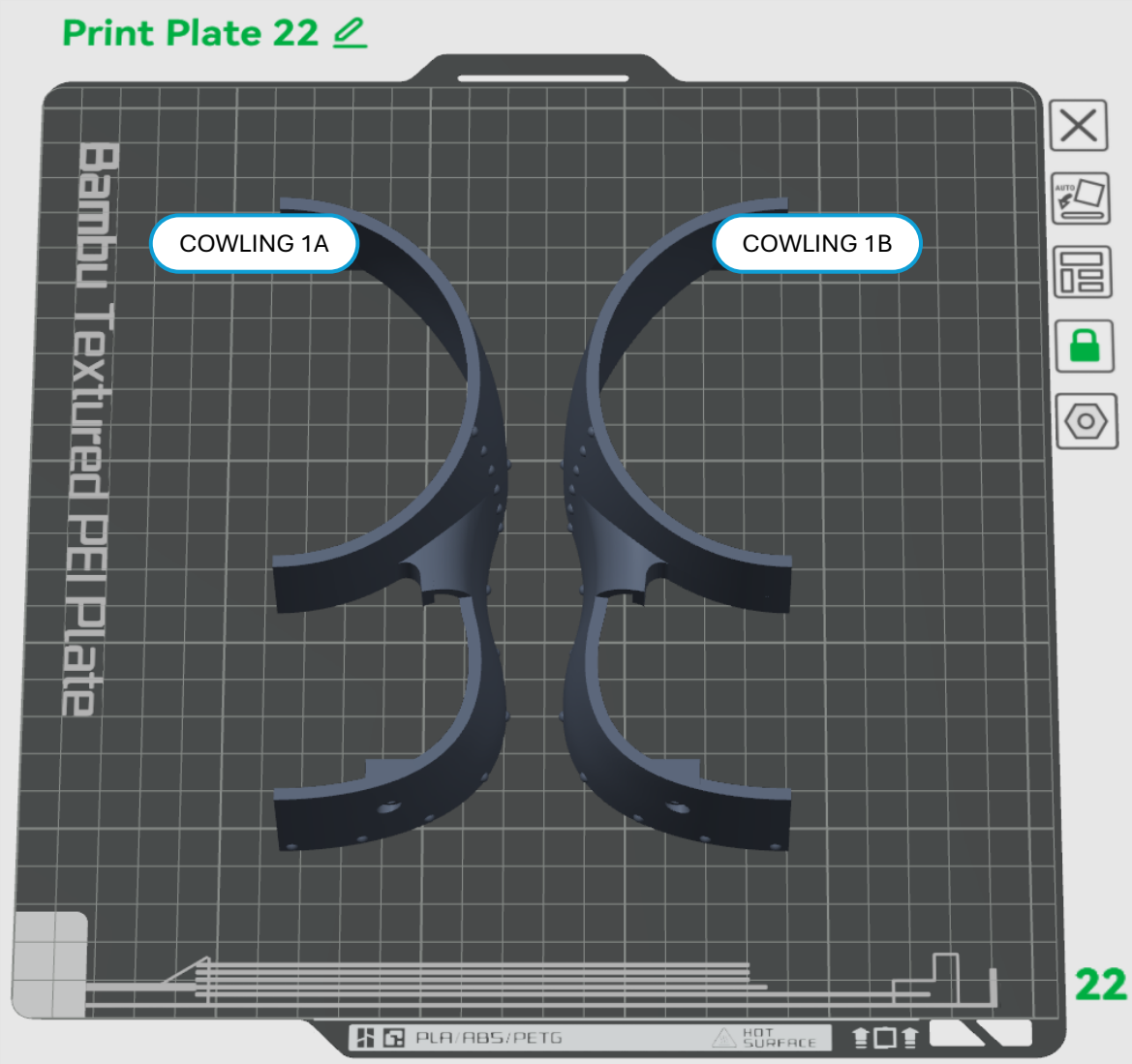

Recommended Slicer Settings:

Layer Height:	0.2
Infill:	20%
Support:	Yes/Normal
Brim:	Optional
AUX Fan:	Off
Print Time:	2h13m
Total Filament:	25.82m 78.25g

Troubleshooting – Part warping

Since these cowlings are only approx. 3mm thick, they are prone to warping at the edges.

Fix:

Use Raft instead of Brim

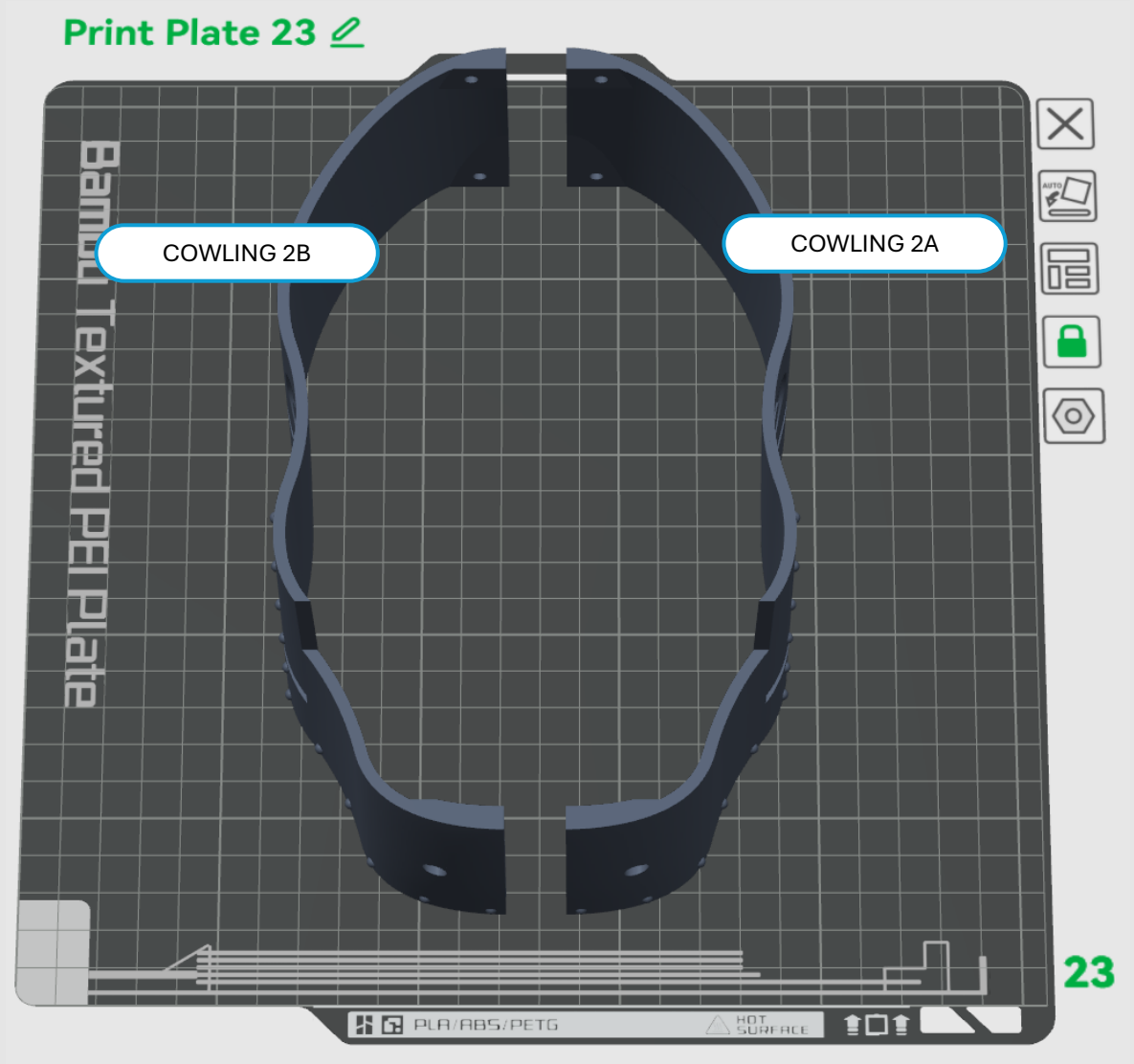

Recommended Slicer Settings:

Layer Height:	0.2
Infill:	20%
Support:	Yes
Brim:	Optional
AUX Fan:	Off
Print Time:	3h4m
Total Filament:	38.82m 117.64g

Troubleshooting – Part warping

Since these cowlings are only approx. 3MM thick, they are prone to warping at the edges.

Fix:

Use Raft instead of Brim

Multi-Material Option Available

COWLING 2A MULTI-MATERIAL.3mf
COWLING 2B MULTI-MATERIAL.3mf



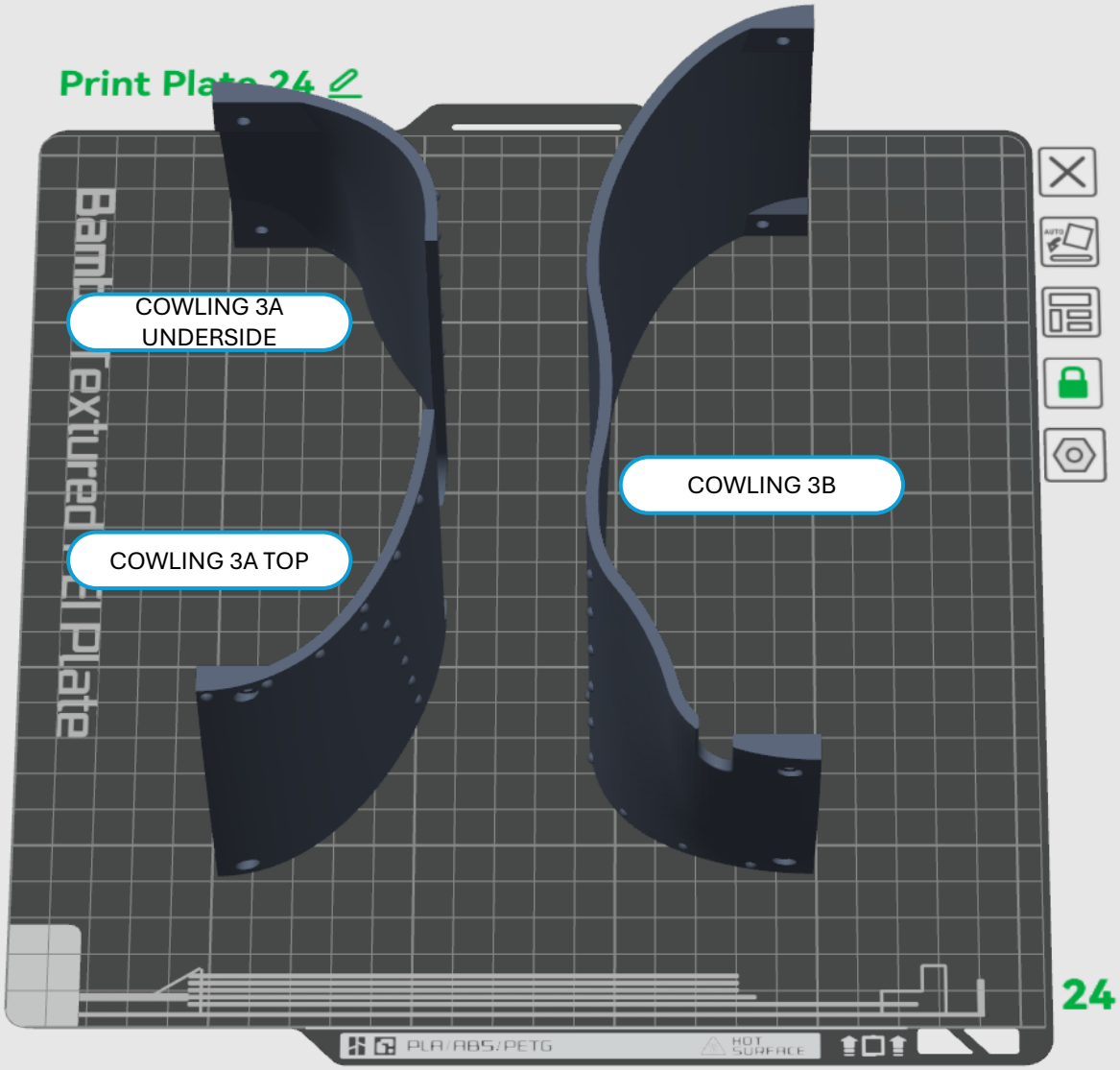

Recommended Slicer Settings:

Layer Height:	0.2
Infill:	20%
Support:	No
Brim:	Optional
AUX Fan:	Off
Print Time:	4h8m
Total Filament:	53.01m 160.66g

Troubleshooting – Part warping

Since these cowlings are only approx. 3mm thick, they are prone to warping at the edges.

Fix:

Use Raft instead of Brim

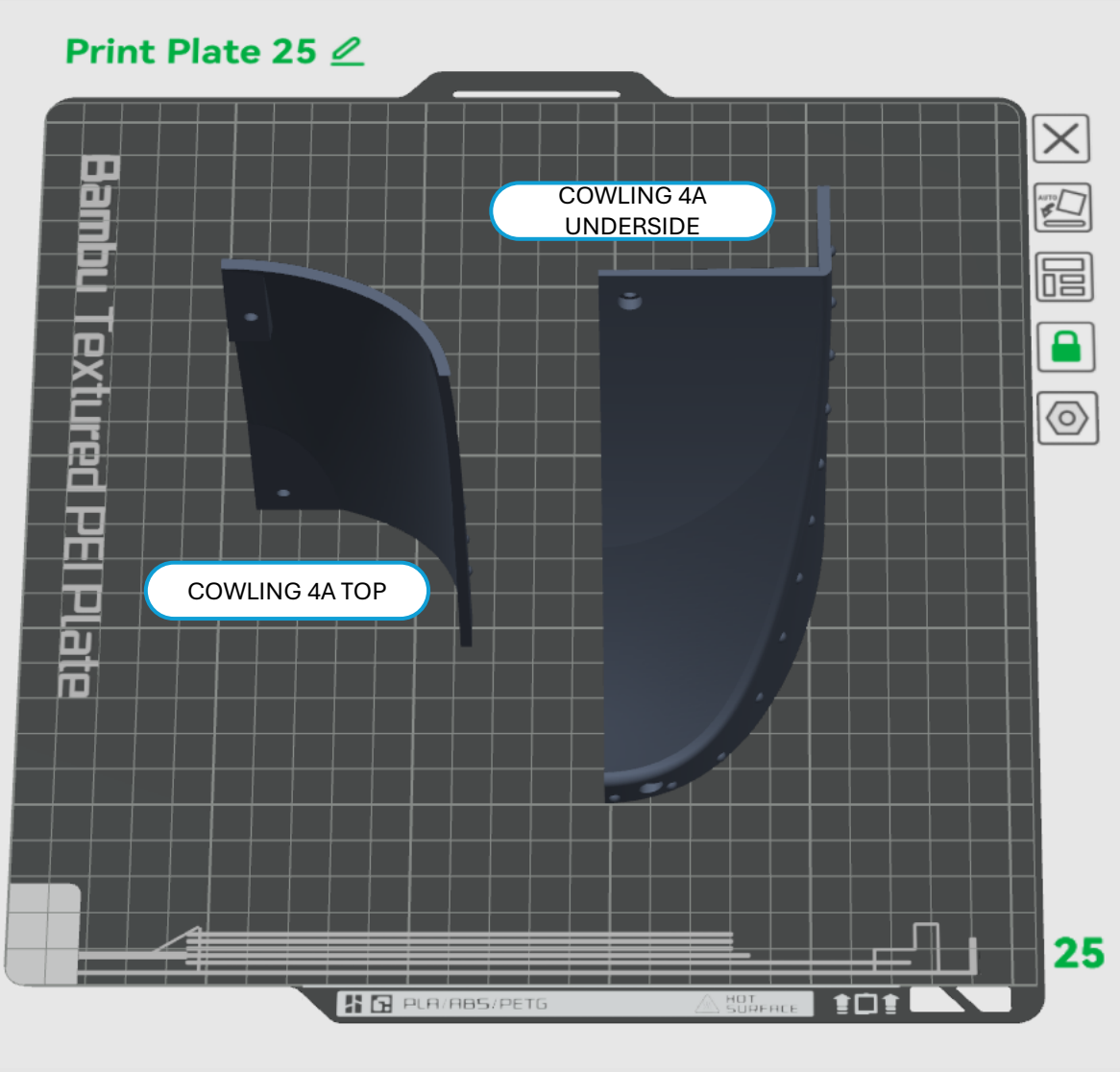

Recommended Slicer Settings:

Layer Height:	0.2
Infill:	20%
Support:	Yes/Tree
Brim:	Optional
AUX Fan:	Off
Print Time:	2h24m
Total Filament:	28.17m 85.36g

Troubleshooting – Part warping

Since these cowlings are only approx. 3mm thick, they are prone to warping at the edges.

Fix:

Use Raft instead of Brim

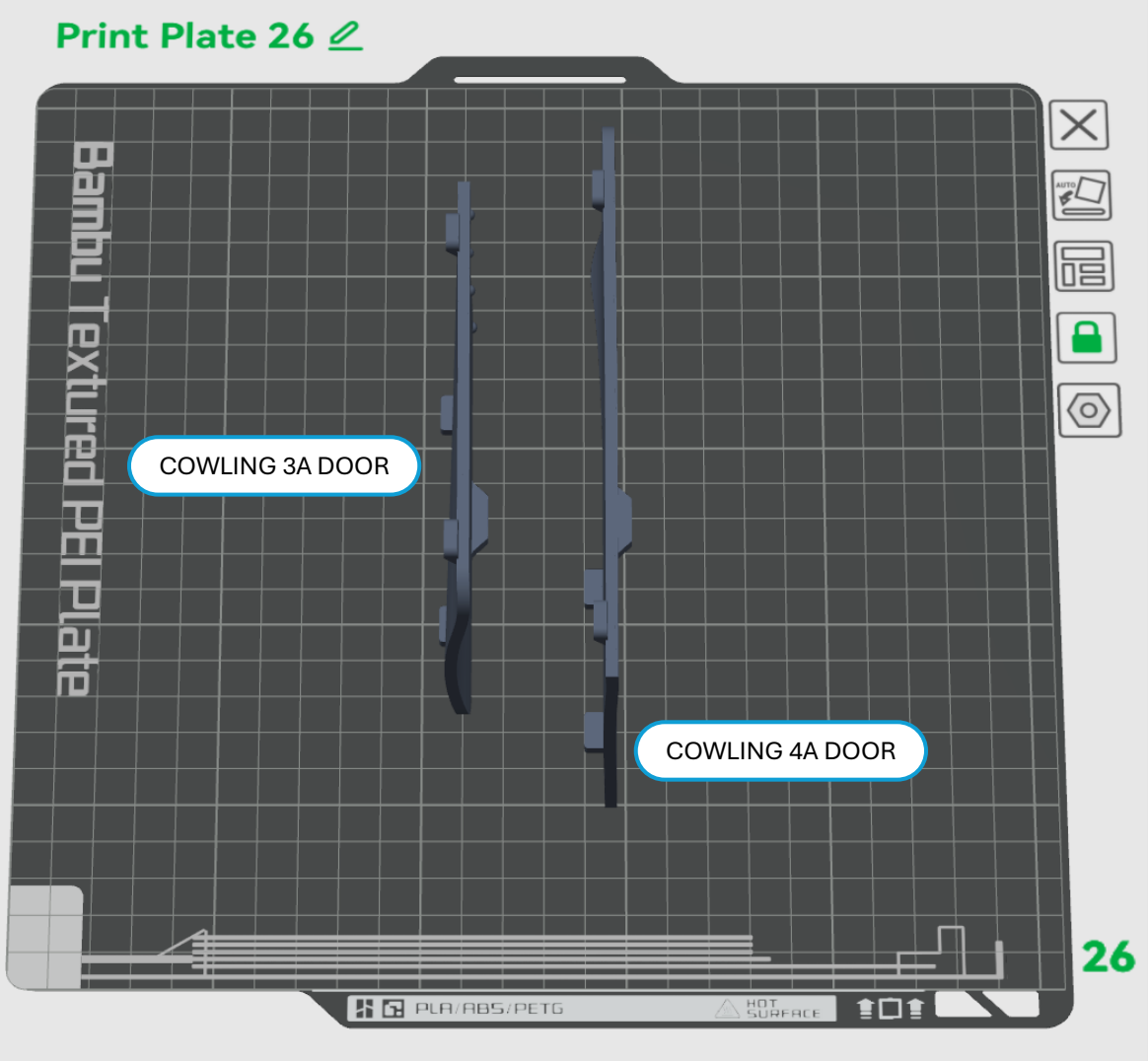

Recommended Slicer Settings:

Layer Height:	0.2
Infill:	20%
Support:	No
Brim:	Optional
AUX Fan:	Off
Print Time:	1h22m
Total Filament:	16.94m 51.33g

Troubleshooting – Part warping

Since these cowlings are only approx. 3mm thick, they are prone to warping at the edges.

Fix:

Use Raft instead of Brim

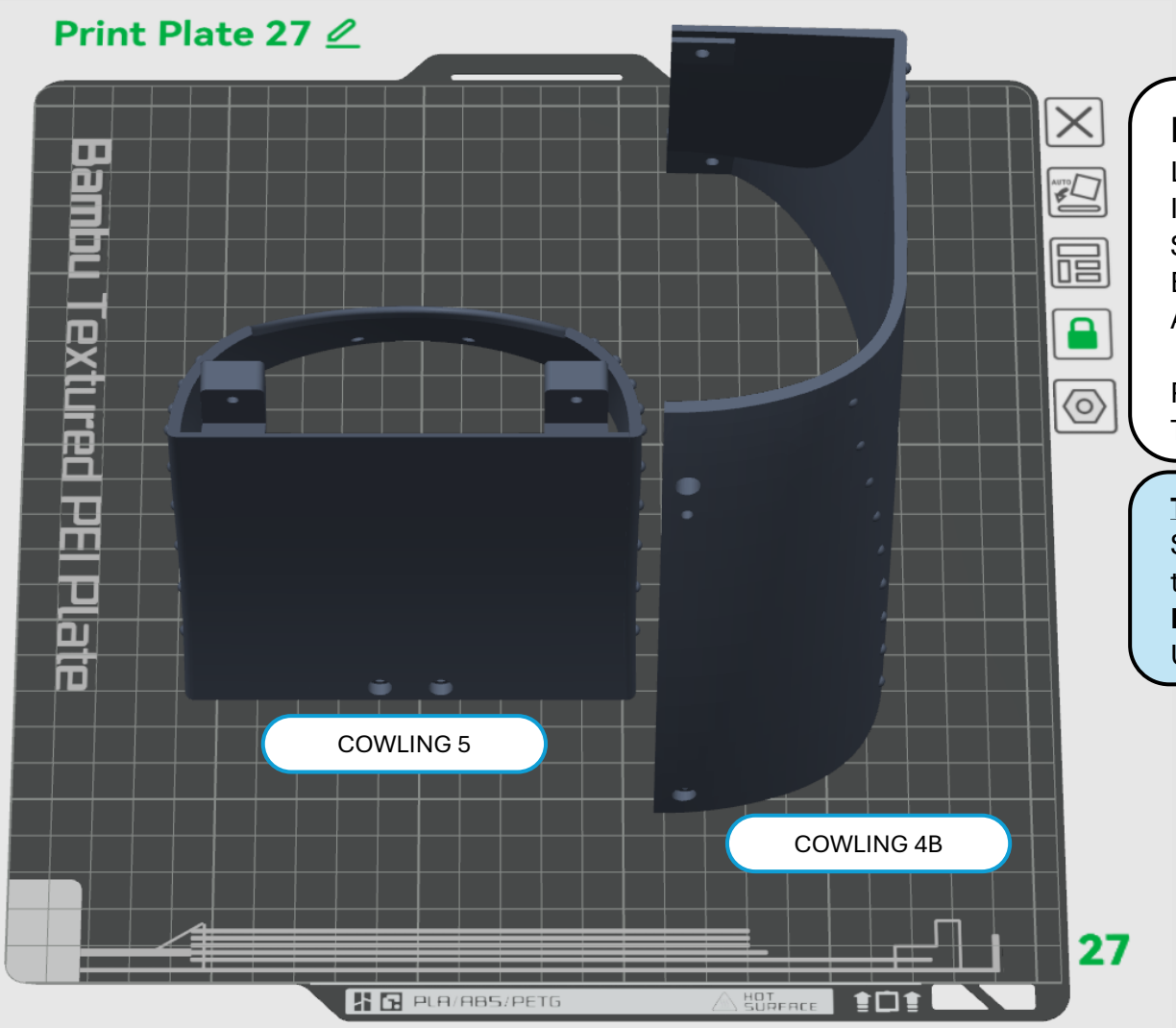

Recommended Slicer Settings:

Layer Height:	0.2
Infill:	20%
Support:	Yes/Tree
Brim:	Optional
AUX Fan:	Off
Print Time:	4h45m
Total Filament:	62.71m 190.06g

Troubleshooting – Part warping

Since these cowlings are only approx. 3mm thick, they are prone to warping at the edges.

Fix:

Use Raft instead of Brim

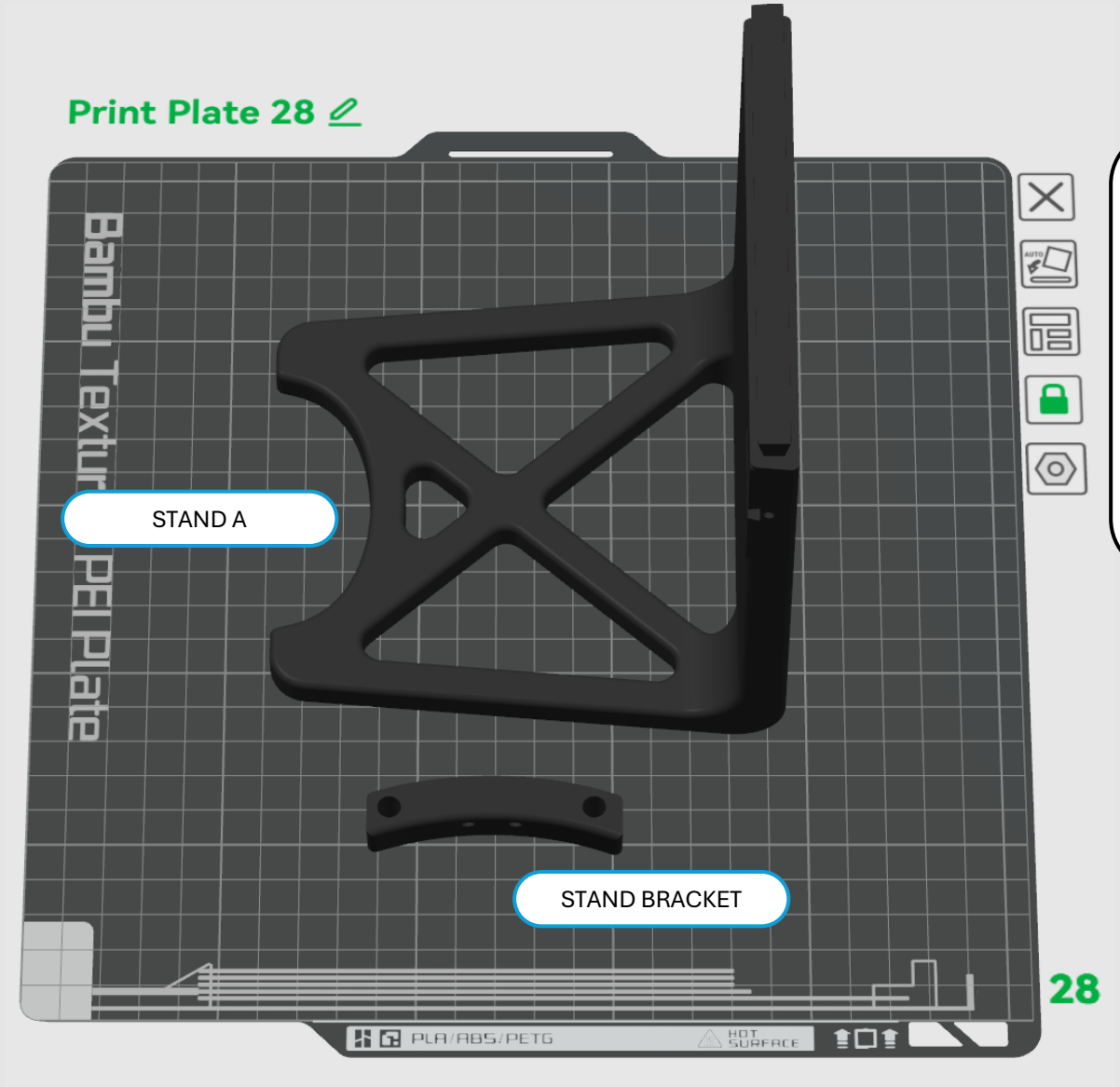

Recommended Slicer Settings:

Layer Height:	0.2
Infill:	20%
Support:	Yes/Tree
• Only on **"STAND A"**	
Brim:	Optional
AUX Fan:	Off
Print Time:	4h18m
Total Filament:	45.88m 139.05g

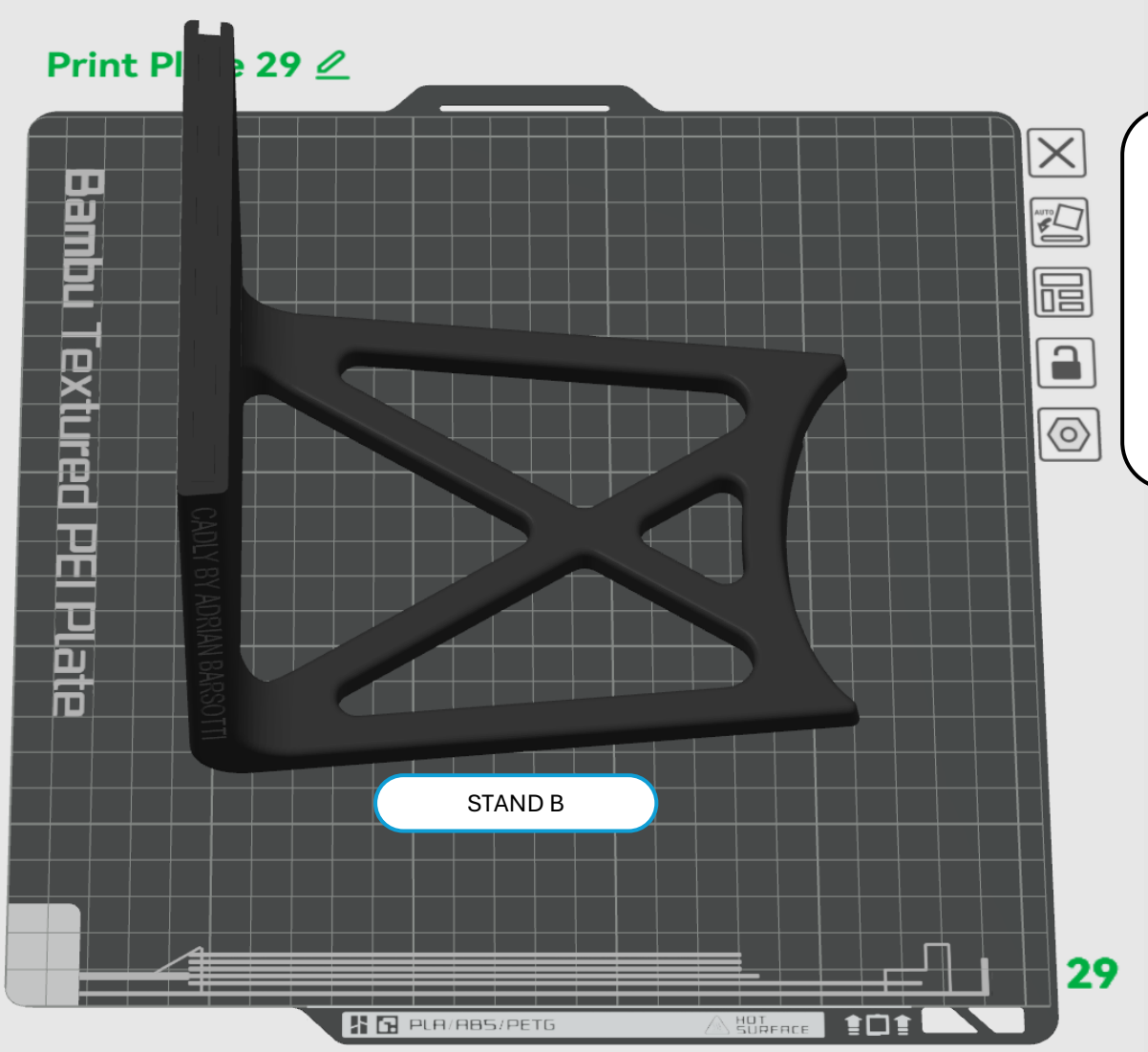

Recommended Slicer Settings:

Layer Height:	0.2
Infill:	20%
Support:	Yes/Tree
Brim:	Optional
AUX Fan:	Off
Print Time:	4h17m
Total Filament:	45.41m 137.63g

Print Plate 30

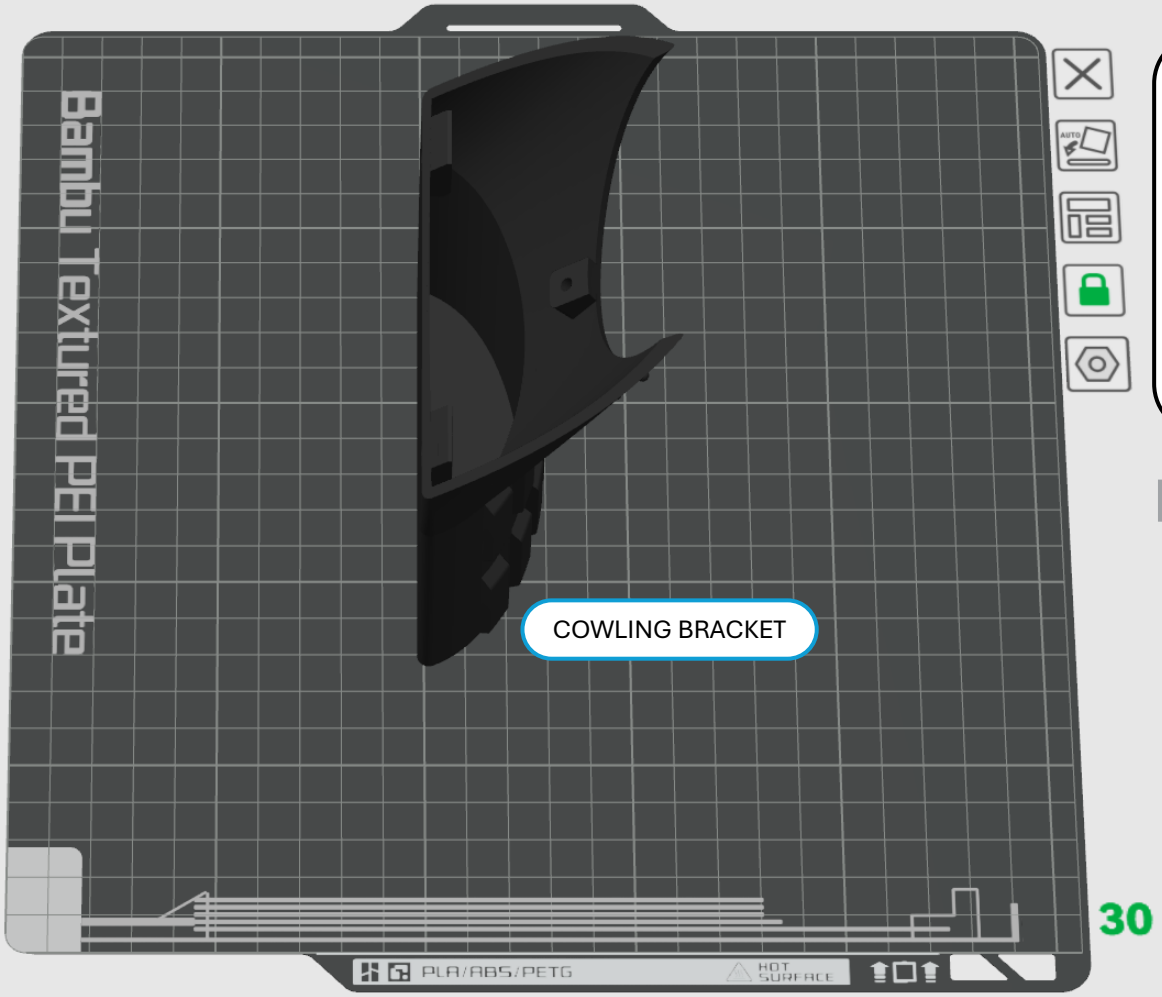

Recommended Slicer Settings:

Layer Height:	0.2
Infill:	20%
Support:	No
Brim:	Optional
AUX Fan:	Off
Print Time:	2h6m
Total Filament:	24.48m 74.19g

Final Part!

Print Plate 31 (Accessories)

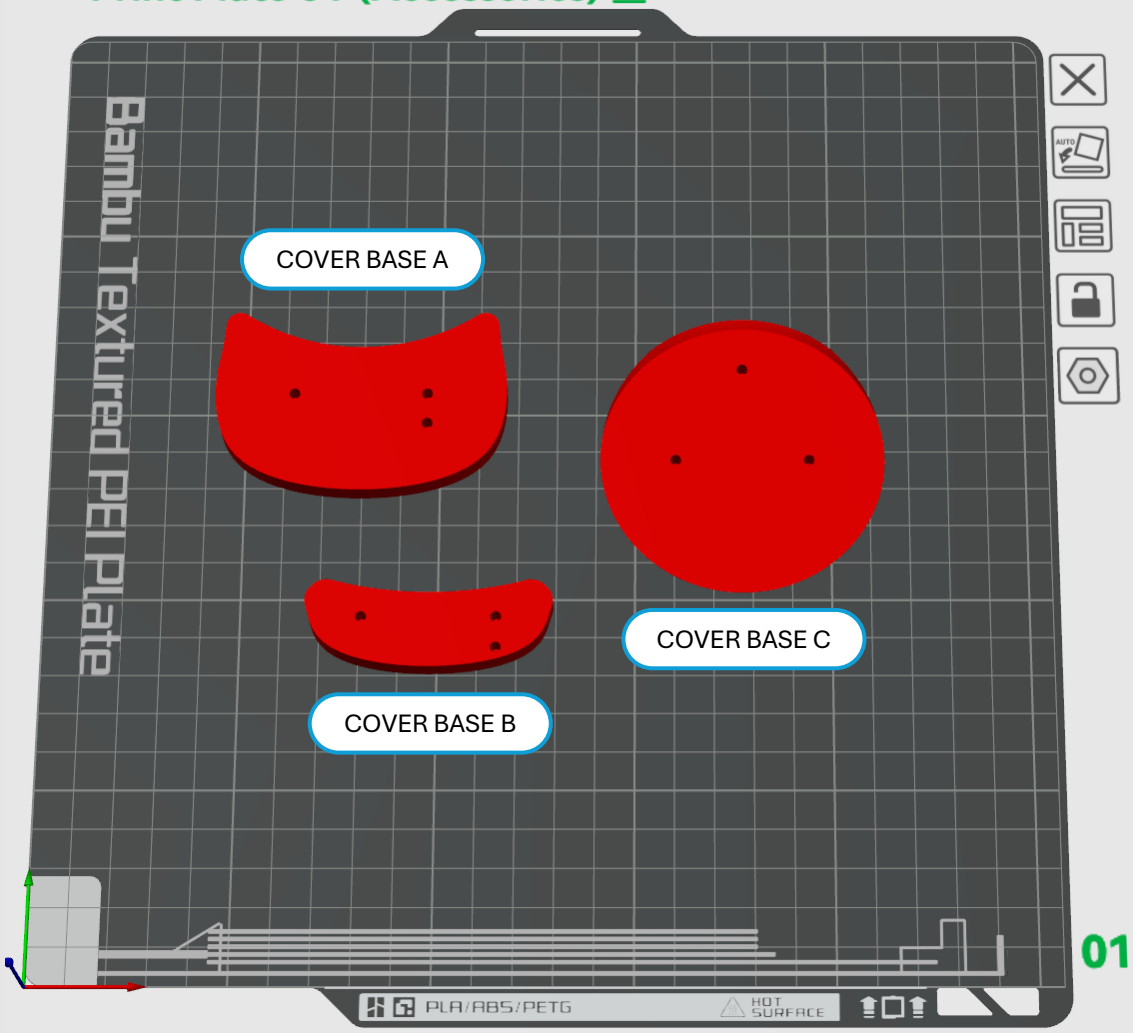

Recommended Slicer Settings:

Layer Height:	0.2
Infill:	20%
Support:	No
Brim:	Optional
AUX Fan:	Off
Print Time:	1h4m
Total Filament:	10.60m 32.13g

Print Plate 32 (Accessories)

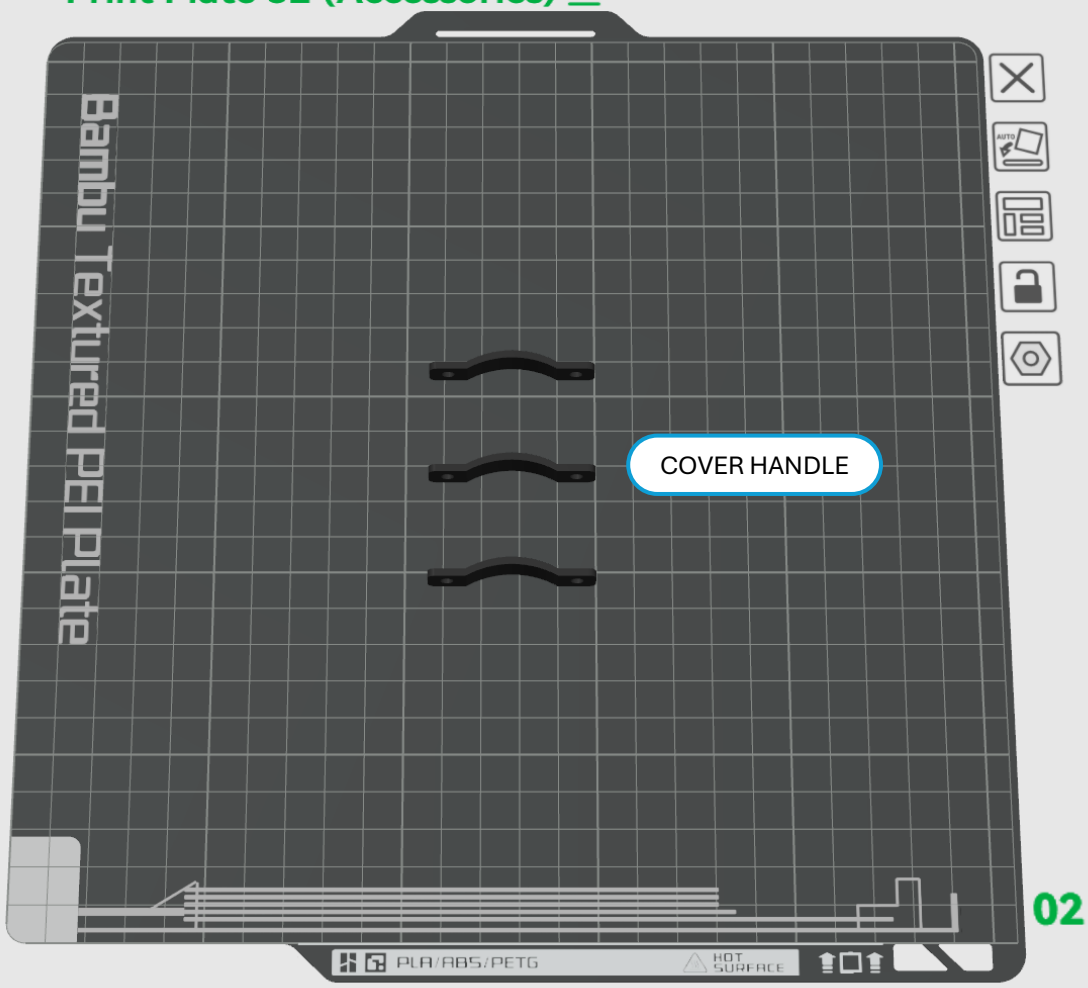

Recommended Slicer Settings:

Layer Height:	0.2
Infill:	20%
Support:	Optional
Brim:	Optional
AUX Fan:	Off
Print Time:	14m29s
Total Filament:	1.11m 3.35g

Print Plate 33 (Accessories)

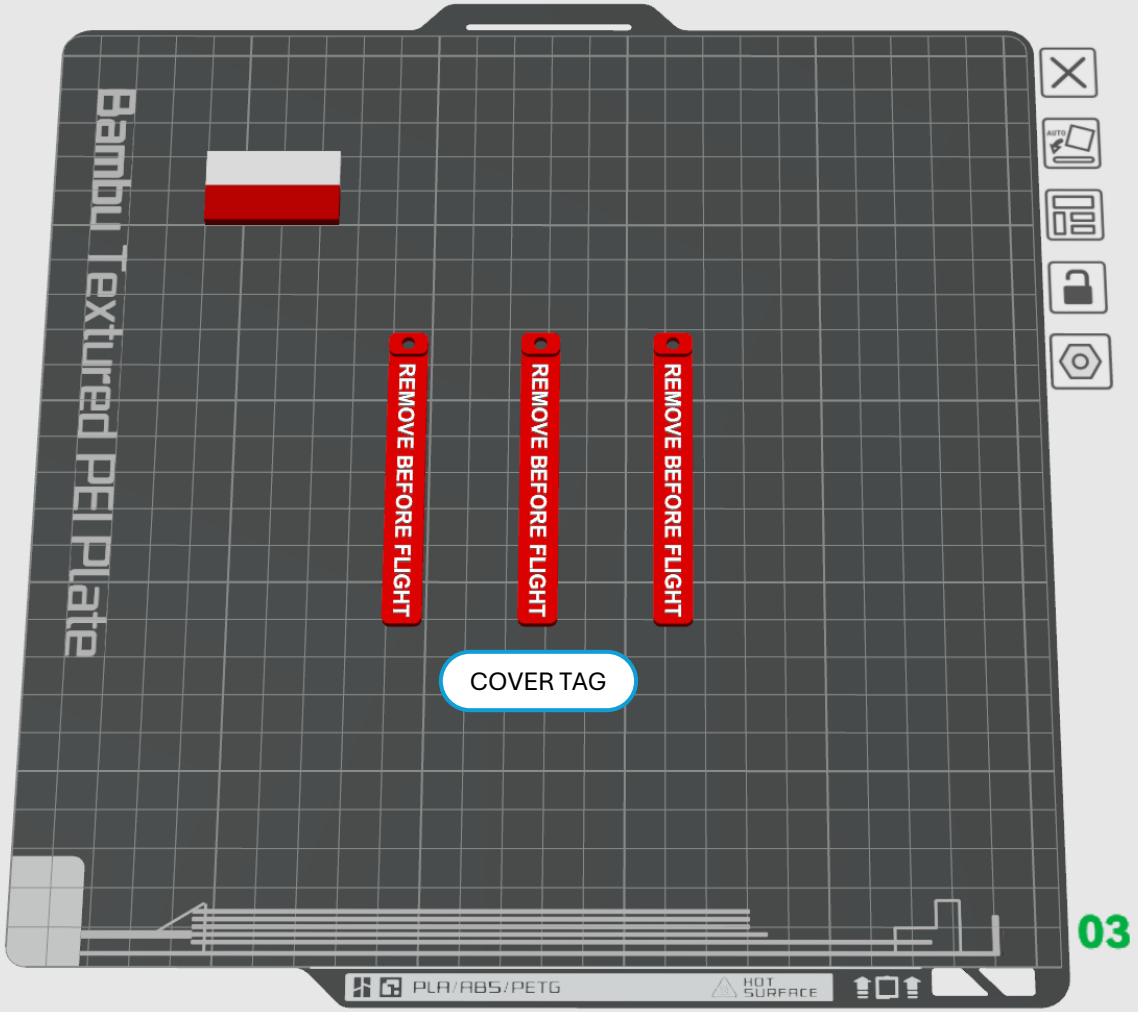

Recommended Slicer Settings:

Layer Height:	0.2
Infill:	20%
Support:	Optional
Brim:	Yes
AUX Fan:	Off
Print Time:	30m21s
Total Filament:	3.17m 9.62g

Colour Change Height:

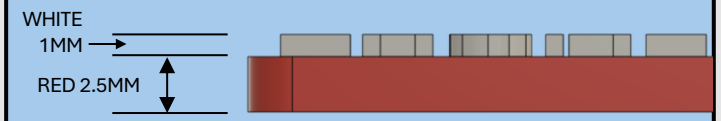

Pre-assembly - Wiring

If needed - In this section, we will wire the controls and power components.

Required Components:

❑ 70 RPM 12V DC Motor	1x
❑ 2.1MM Power Jack	1x
❑ 10K Linear Potentiometer	2x
❑ 16AWG Wire (Red and Black)	Length 450MM
❑ 22AWG Wire (Any Colour)	Length 550MM
❑ Heat-shrink Tubing	

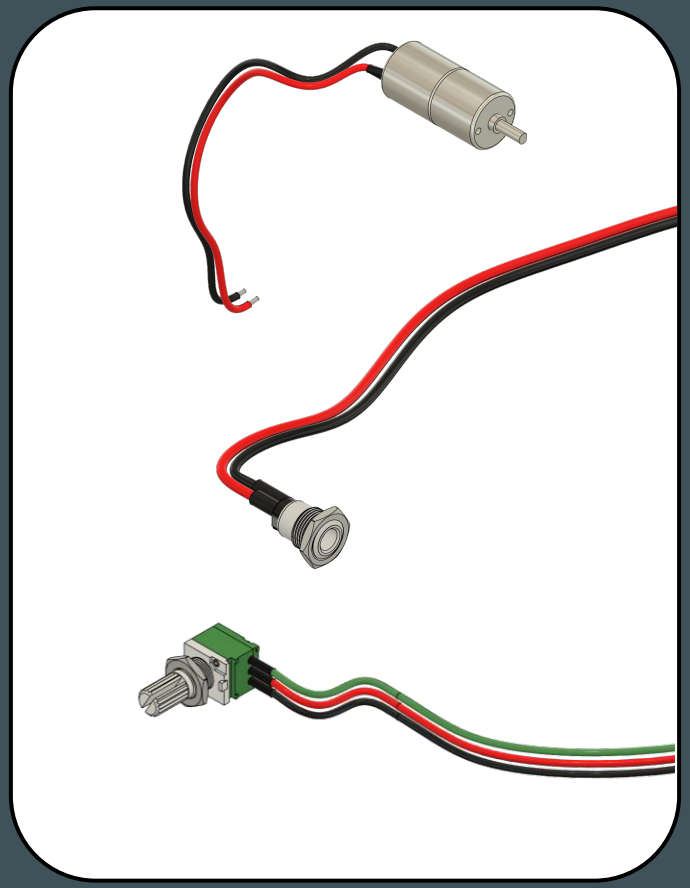

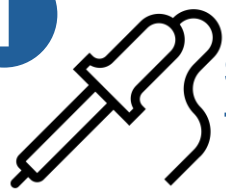

Soldering is required in this section!



70 RPM 12V DC MOTOR
1x



16AWG Wire (Red & Black)
Length: 230mm (1 ea.)



Heat shrink

1

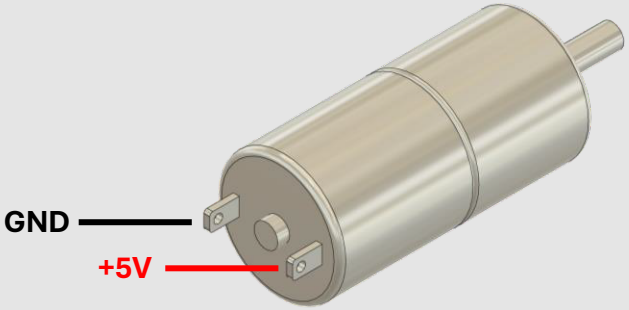

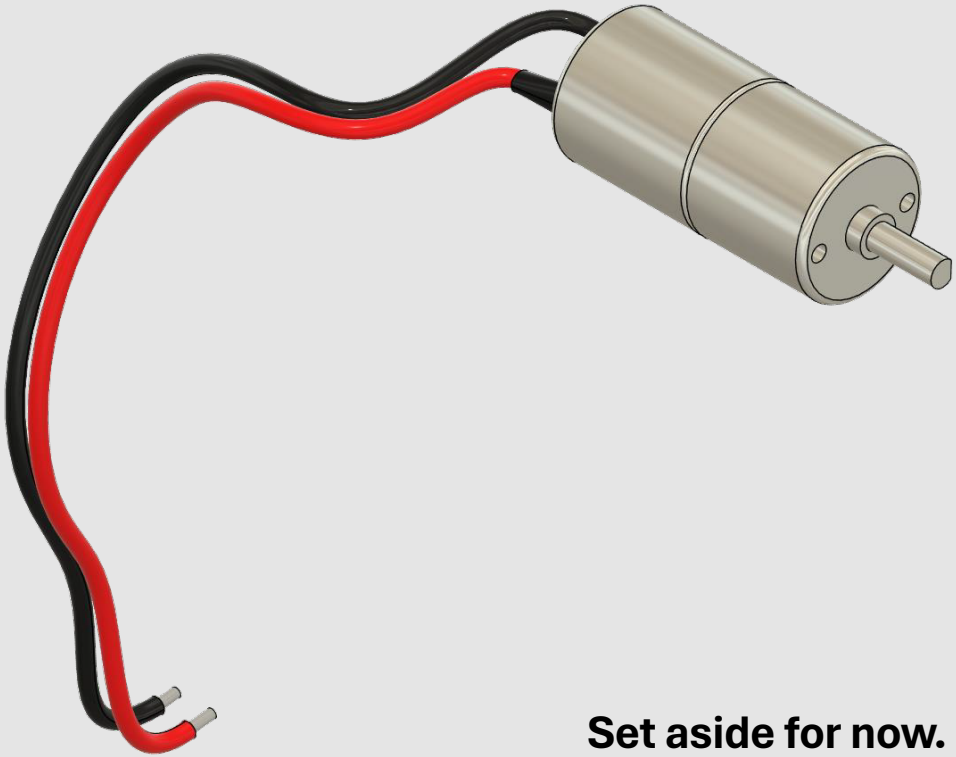

Set aside for now.



2.1MM POWER JACK
1x



16AWG Wire (Red & Black)
Length: 450mm (1 ea.)



Heat shrink

Power Jack Wiring Diagram

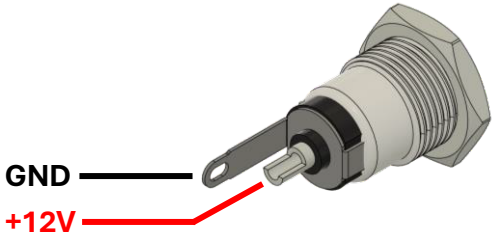

2

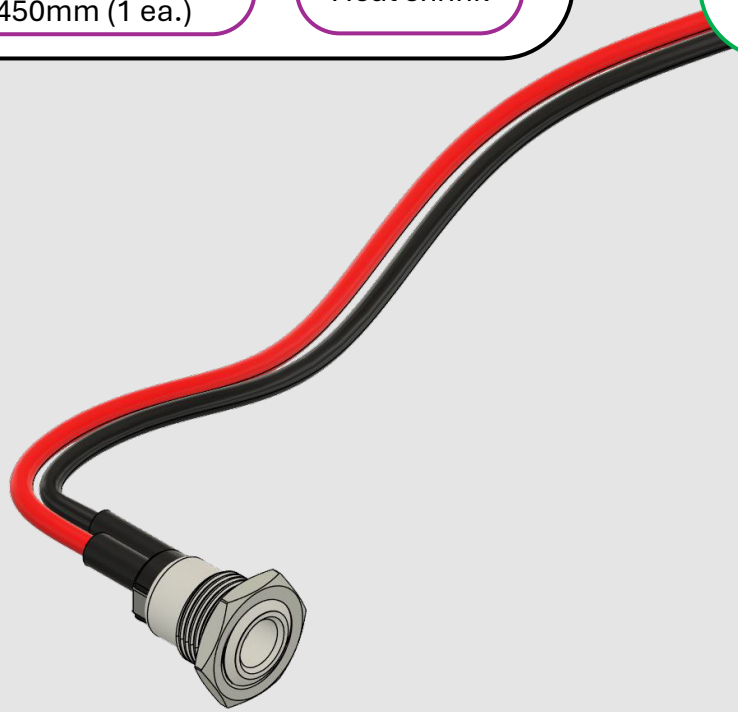

Set aside for now.

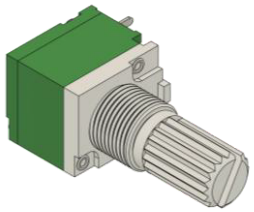

10K LINEAR POTENTIOMETER
2x



22AWG Wire
Length Req. 500mm (6 ea.)



Heat shrink

Potentiometer Wiring Diagram

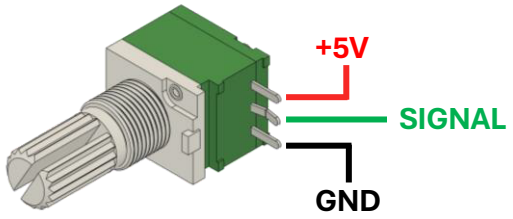

3

2x

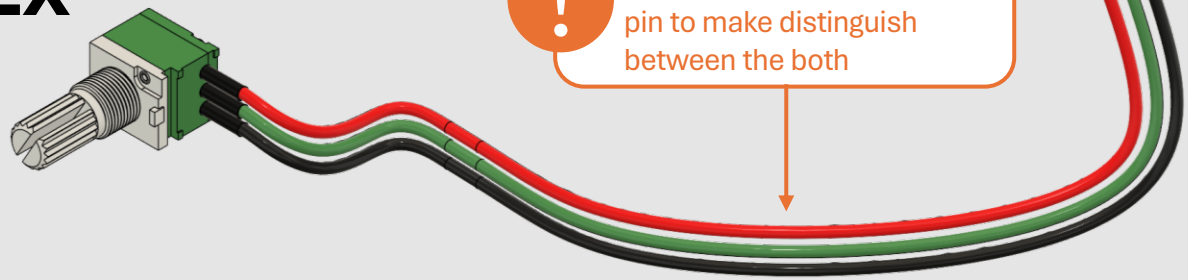

Use a different colour for the second potentiometer signal pin to make distinguish between the both

Set aside for now.

1. Propeller Assembly



In this section we will assemble the propellers.

Required 3D Printed Parts:

- ❑ PROP CONE A
- ❑ PROP CONE B
- ❑ PROP CONE PLATE
- ❑ PROP CONE POWER SHAFT
- ❑ PROP CONTROL TRANSFER SHAFT
- ❑ PROP CONTROL GEAR – 1, 2, 3, 4, 5, 6 & 7 — 1 ea.
- ❑ C-CLIP SIZE A — 2x
- ❑ PROP ALIGNMENT TOOL
- ❑ PROP — 6x
- ❑ BLADE INSERT — 6x
- ❑ *PROP MULTI-MATERIAL (Optional)*

Required Hardware:

- ❑ M2.5x6 Hex Socket Screws — 6x
- ❑ M3x8 Hex Socket Screws — 11x
- ❑ 8MM Bearings — 6x



PROP CONE A
1x



8MM Bearing
6x

4

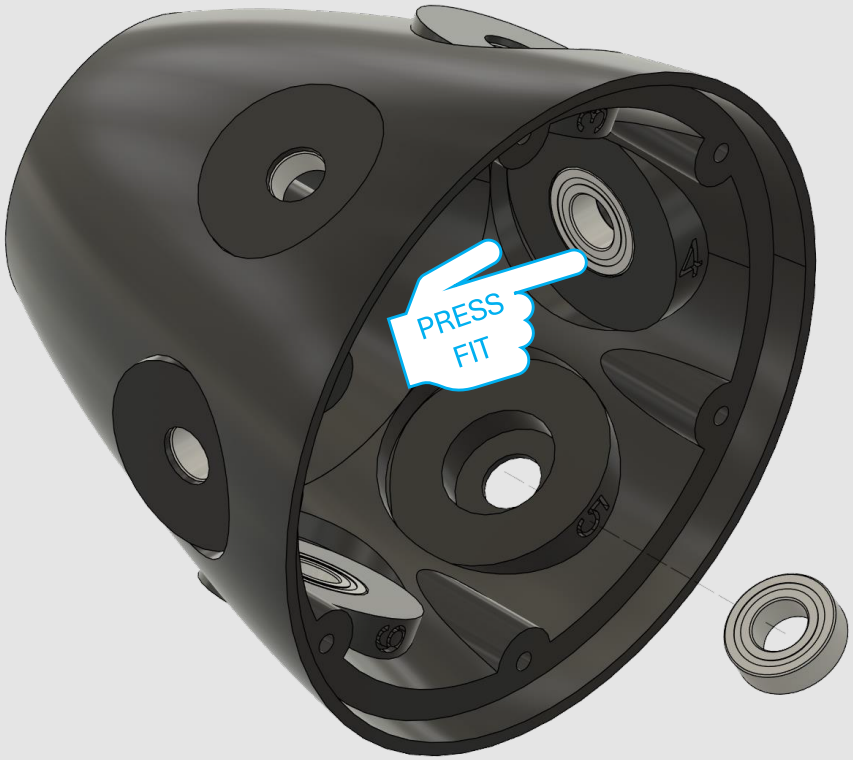

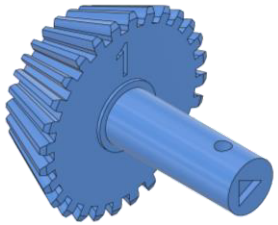

PROP CONTROL GEAR – 1, 2, 3, 4, 5 & 6
1 ea.

5

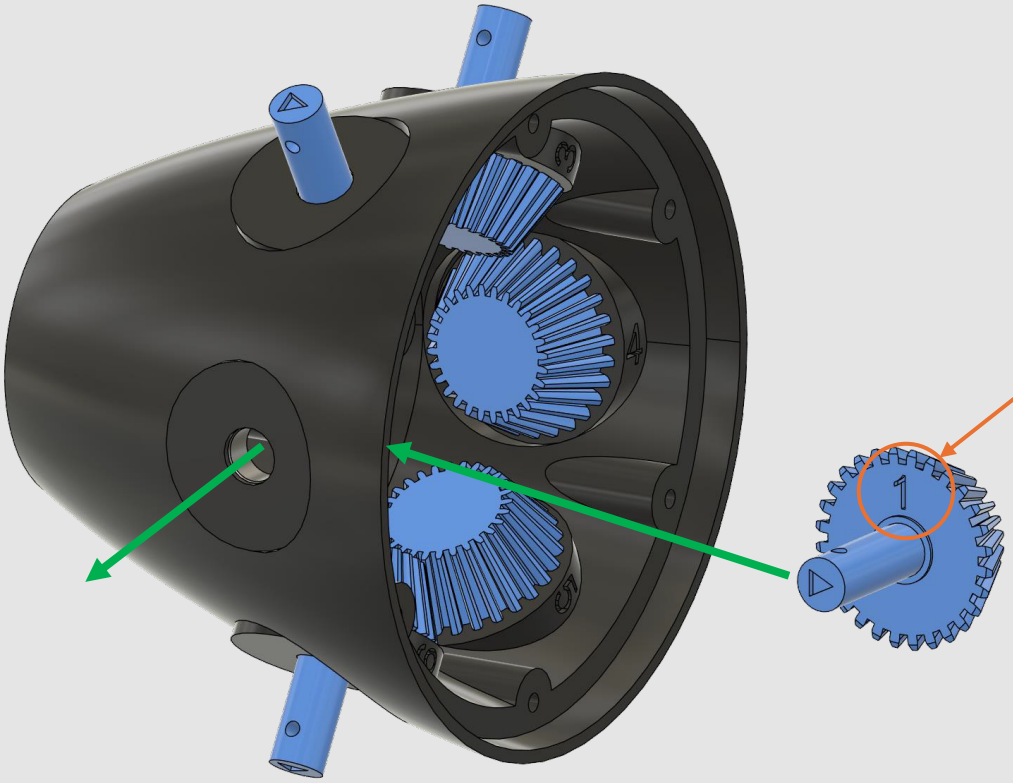

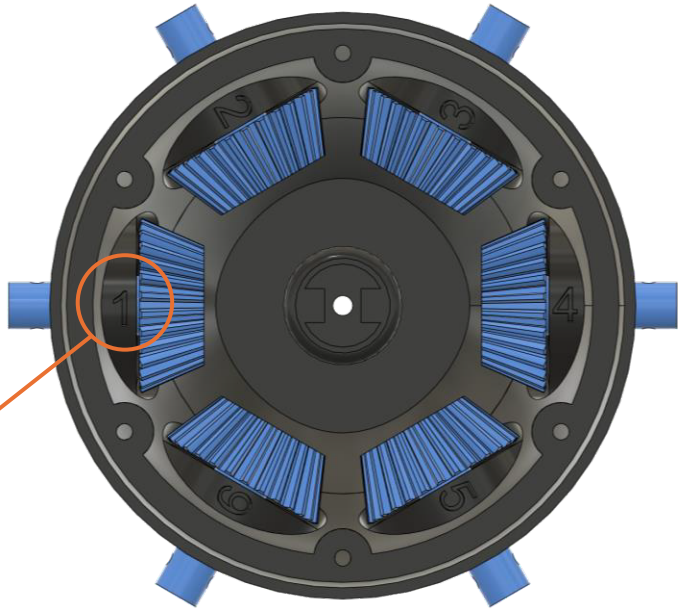

Ensure to match gear each gear number with numbers inside “PROP CONE A”

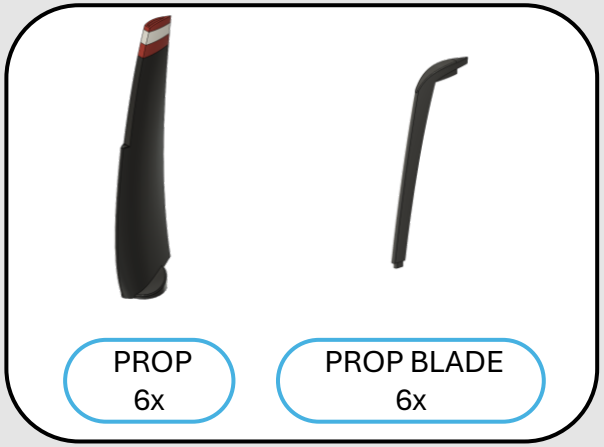

6

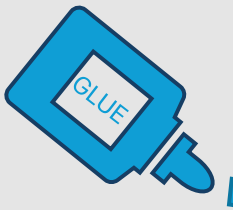

If needed, use super glue at each insertion point.

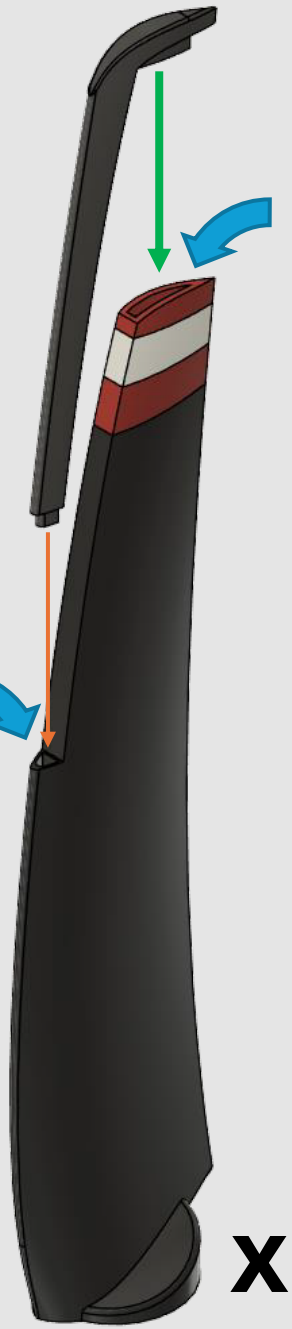

x6

Multi-Material Option Available

PROP MULTI-MATERIAL.3mf

Go to Slide 10 for more details.

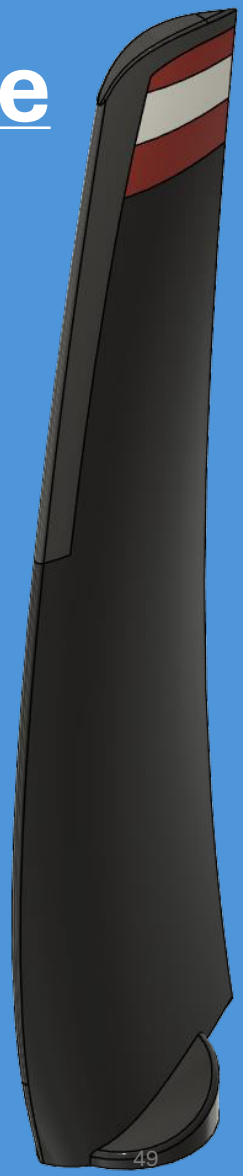

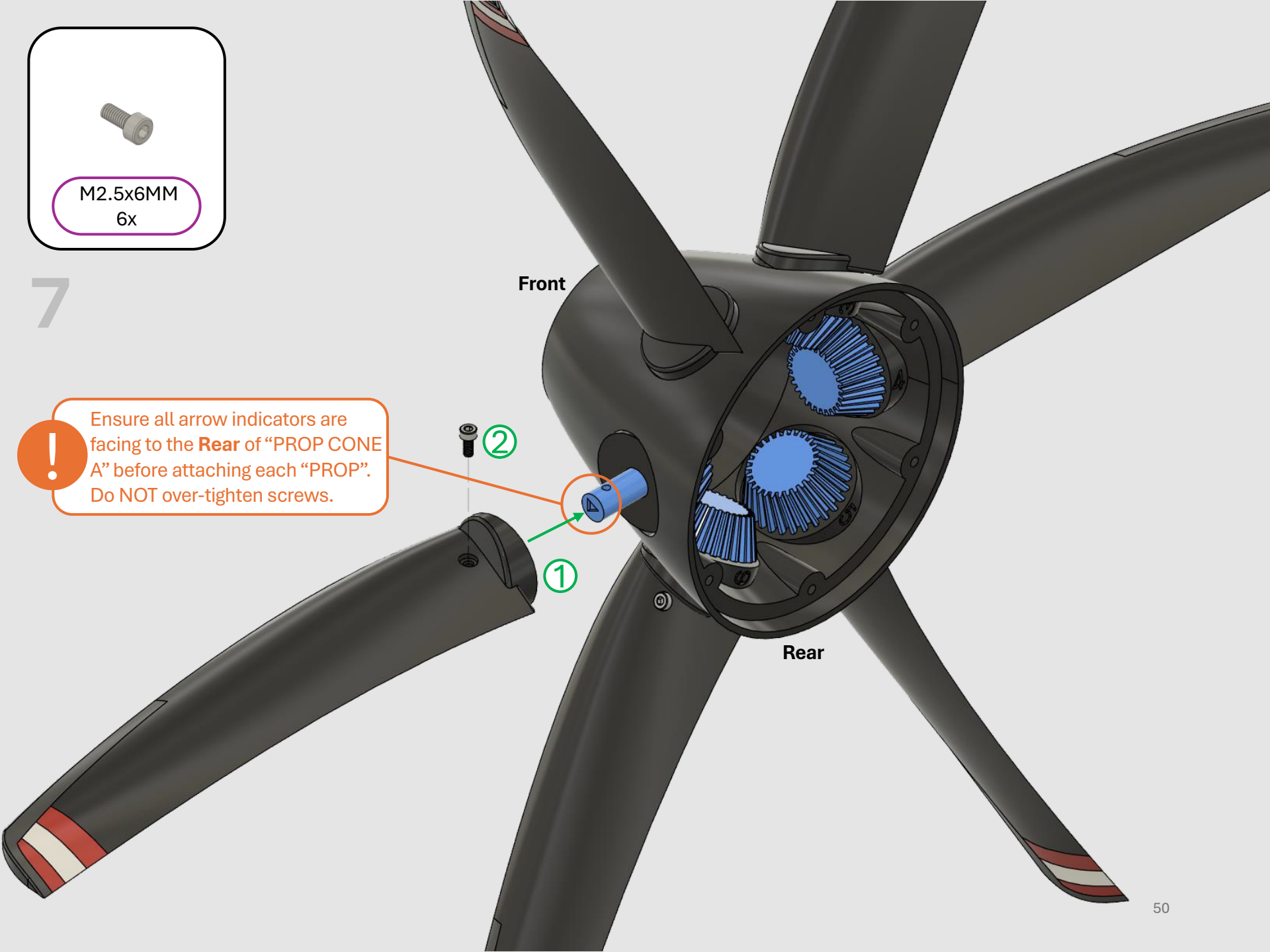
M2.5x6MM
6x
7
Front
Ensure all arrow indicators are facing to the **Rear** of “PROP CONE A” before attaching each “PROP”. Do NOT over-tighten screws.
②
①
Rear

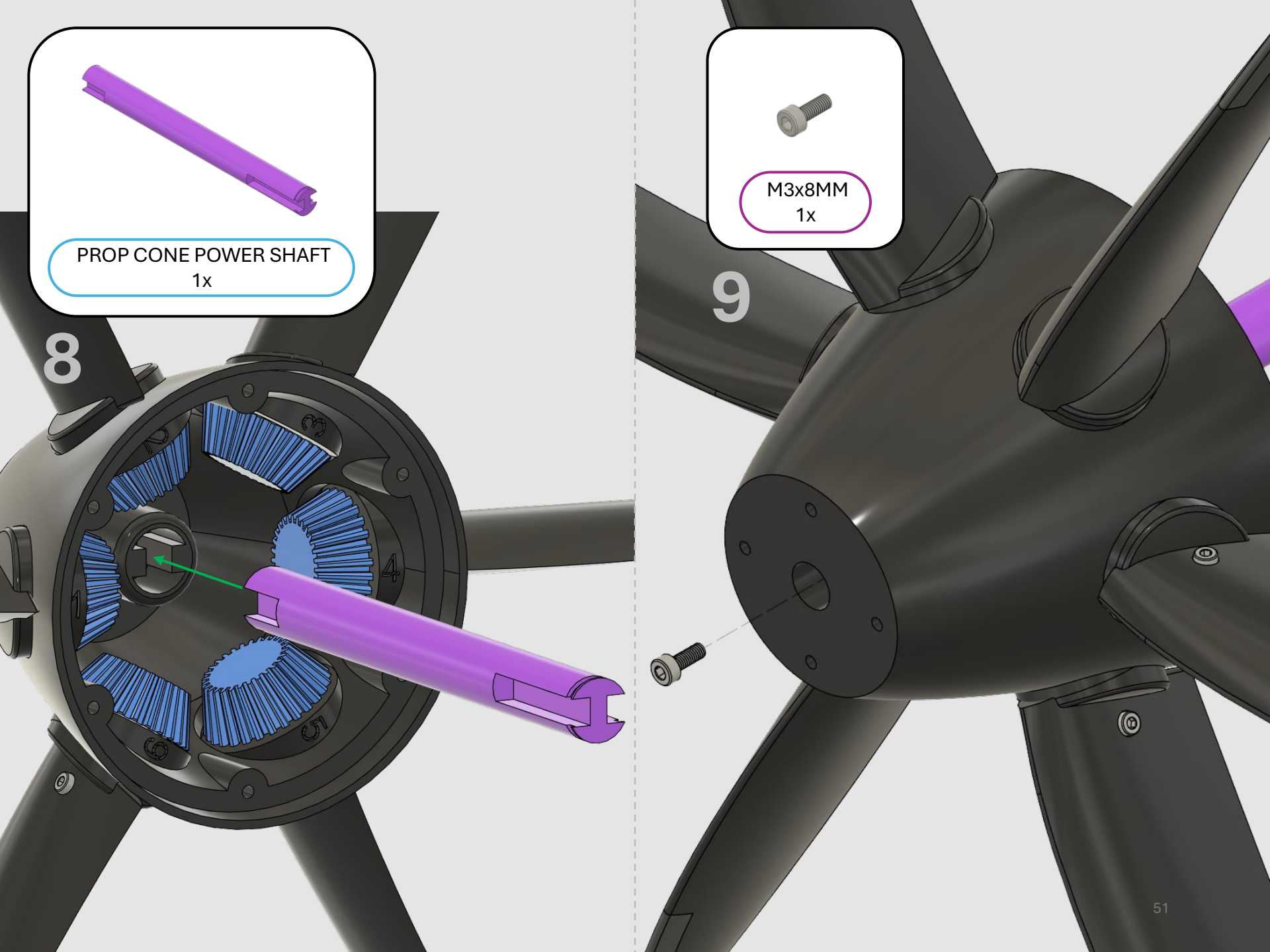
PROP CONE POWER SHAFT
1x
8
M3x8MM
1x
9

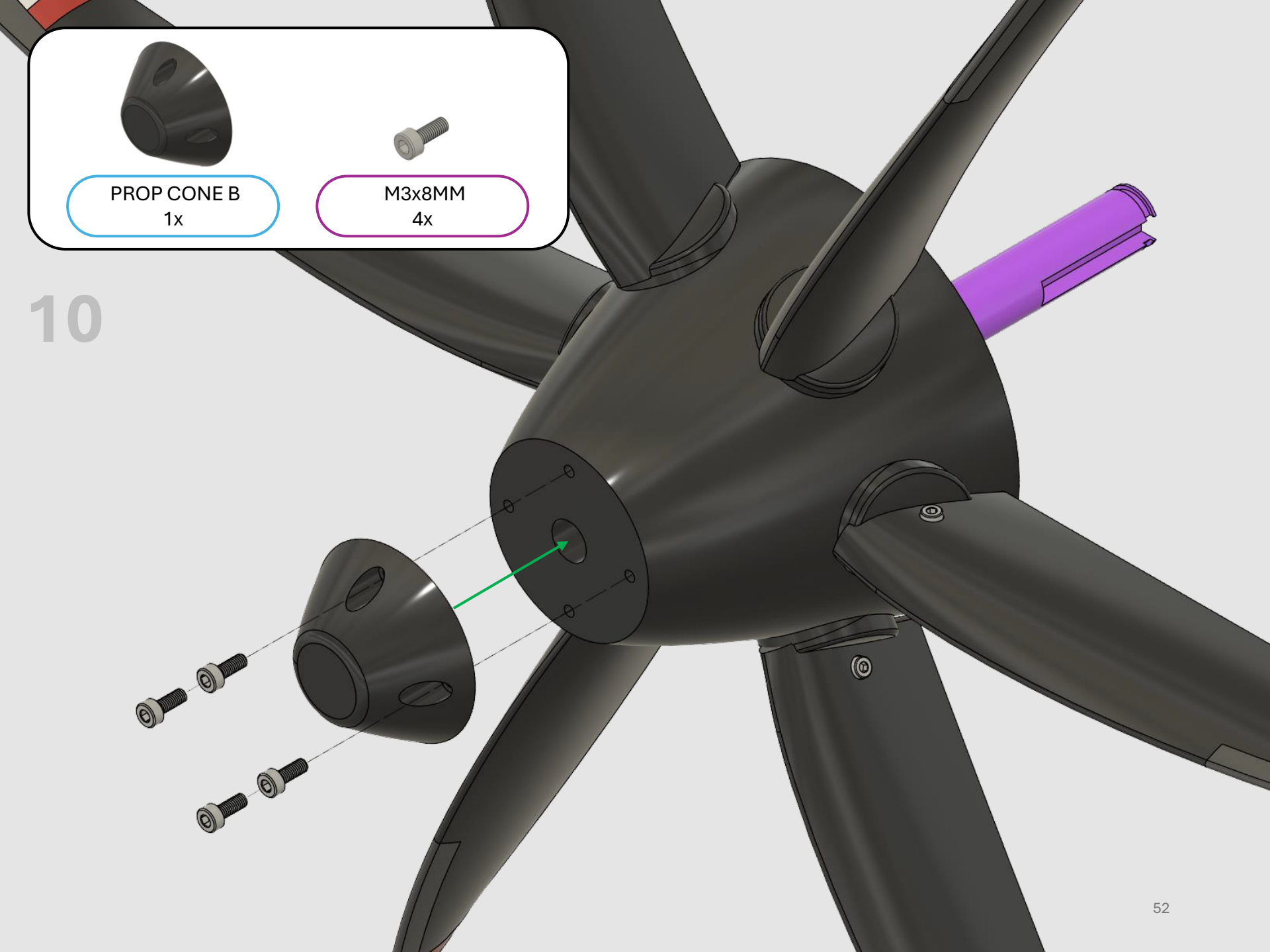
PROP CONE B
1x
M3x8MM
4x
10



PROP ALIGNMENT TOOL
1x

11

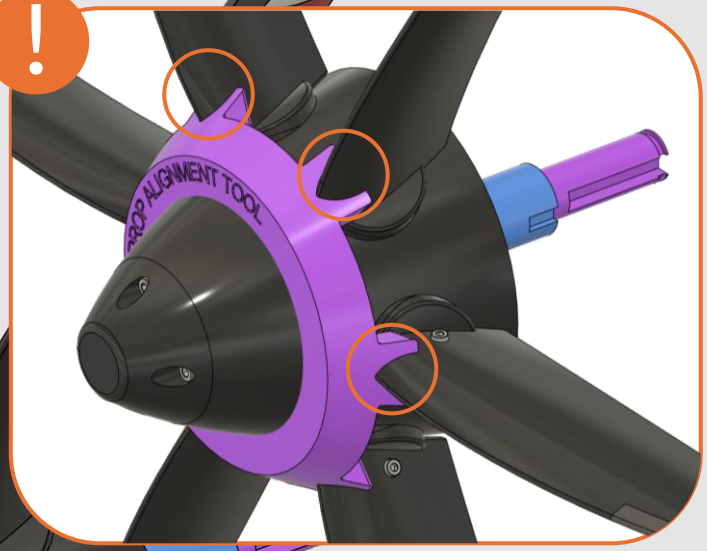

Ensure to align each blade to the notches in the alignment tool. Should be a snug fit.

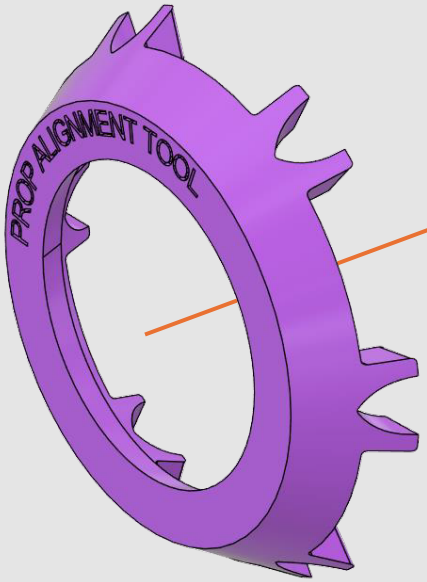

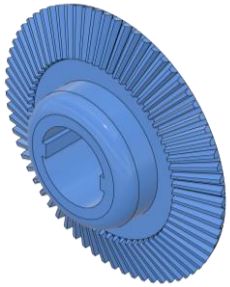

PROP CONTROL GEAR – 7
1x

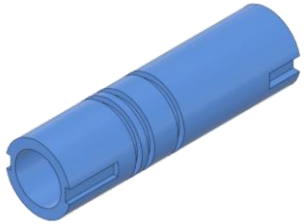

PROP CONTROL TRANSFER SHAFT
1x

12

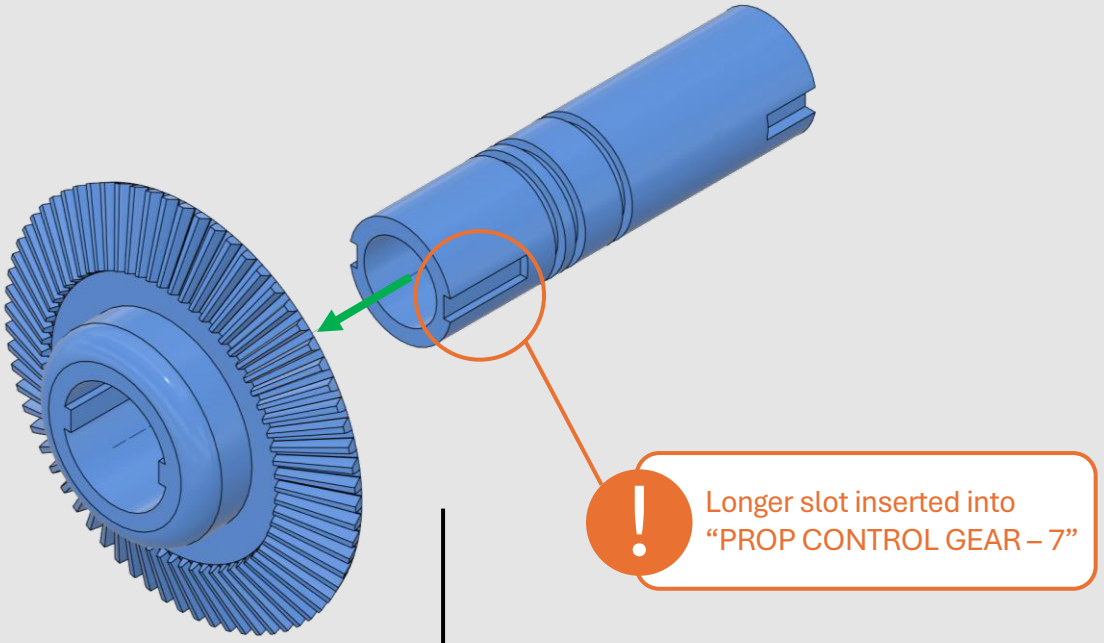

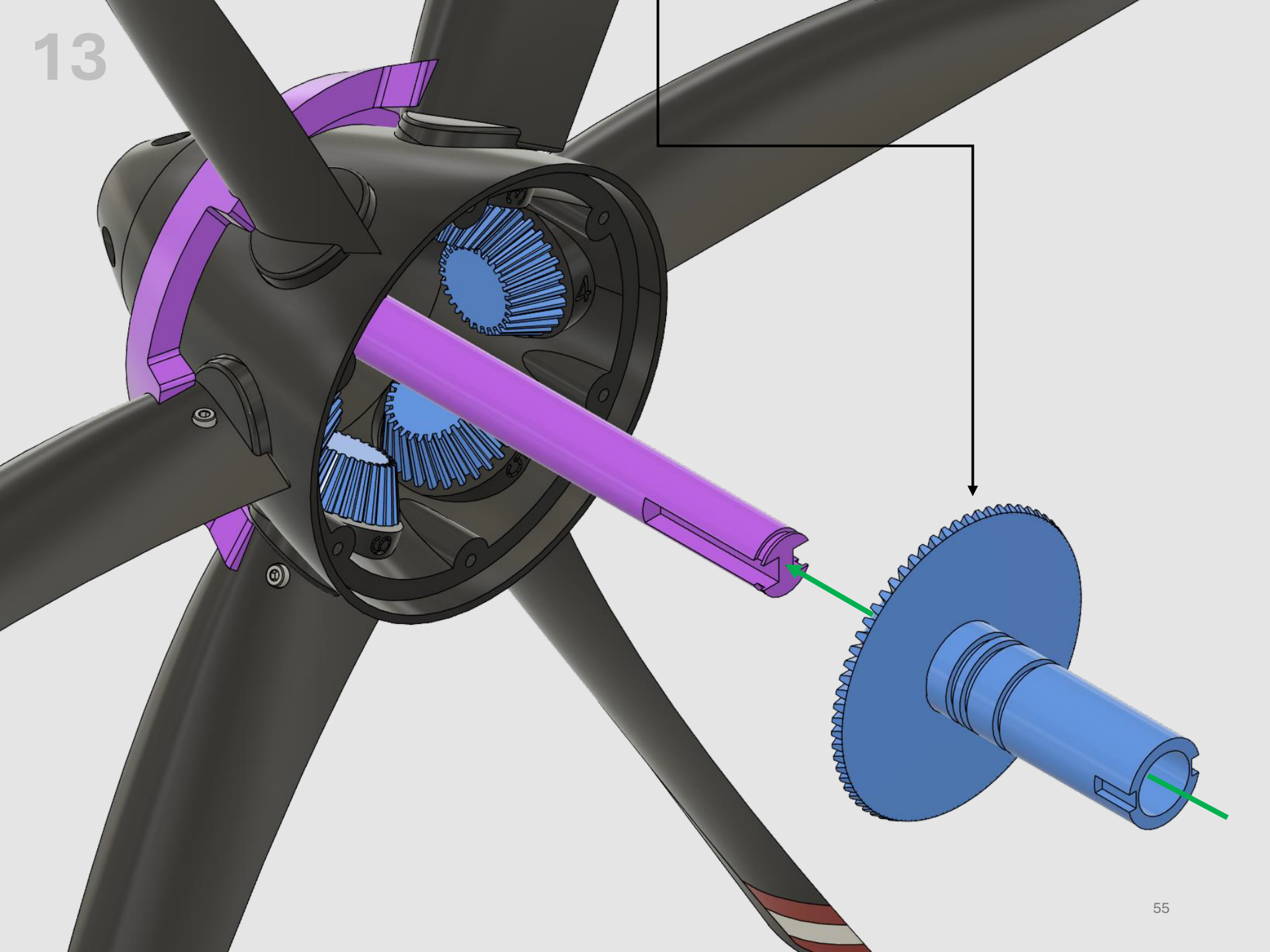

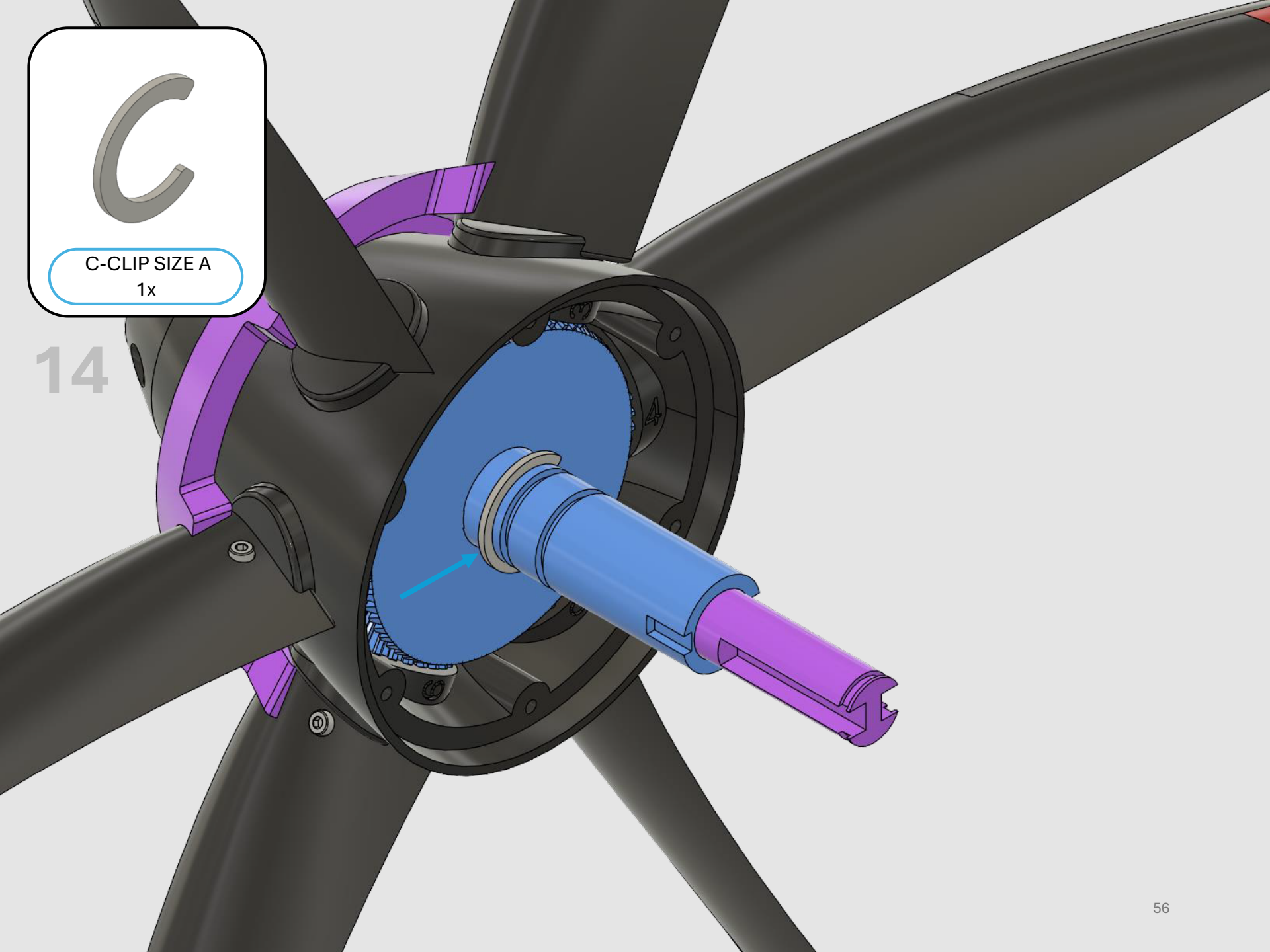
C-CLIP SIZE A
1x
14

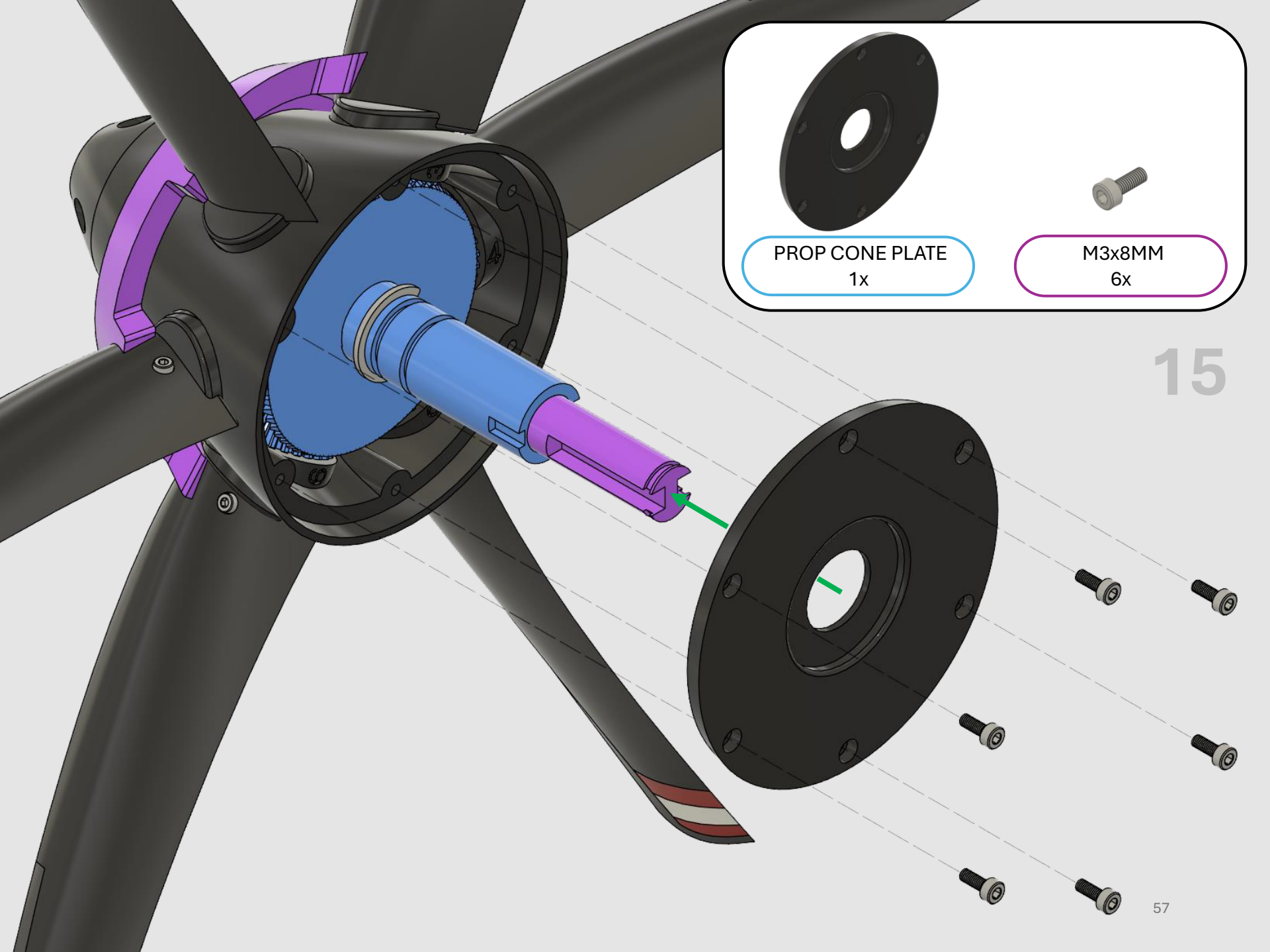
PROP CONE PLATE
1x
M3x8MM
6x
15

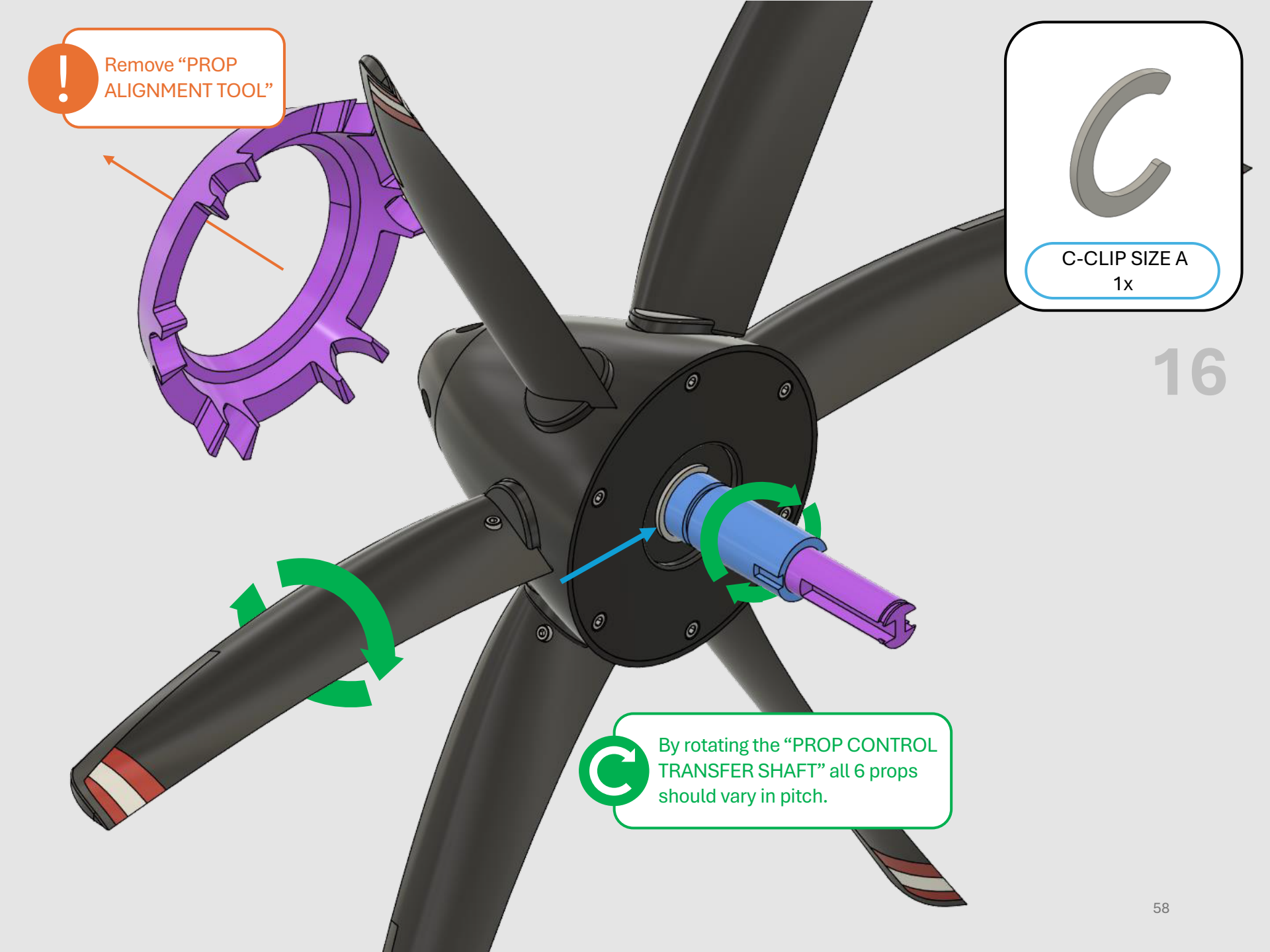
Remove “PROP ALIGNMENT TOOL”
C-CLIP SIZE A
1x
16
By rotating the “PROP CONTROL TRANSFER SHAFT” all 6 props should vary in pitch.

Propeller Assembly Completed!

Set aside for now



2. Frame Subassembly A

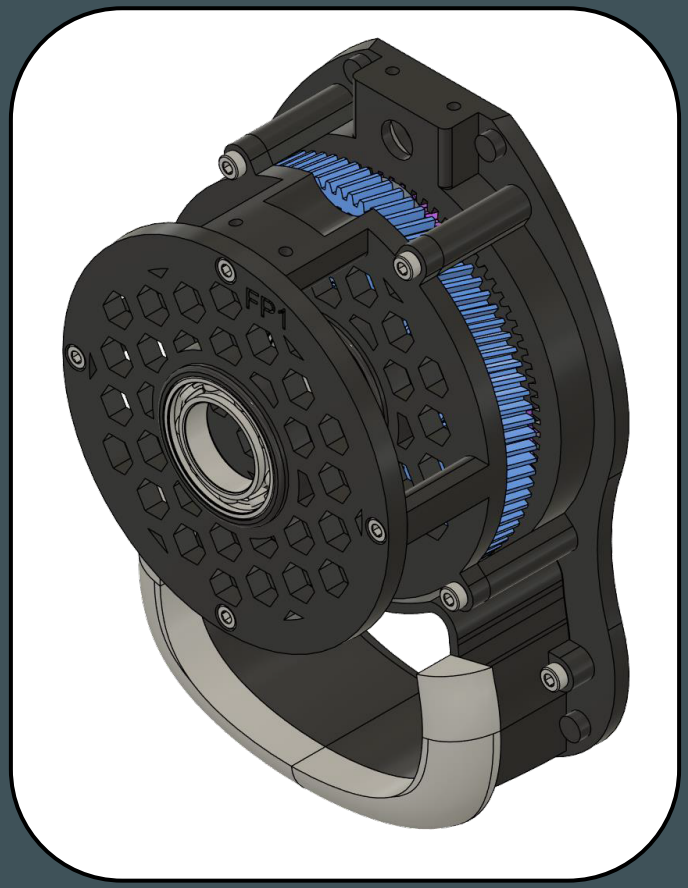

Required 3D Printed Parts:

- ❑ FP1
- ❑ FP2
- ❑ FP3
- ❑ INLET A
- ❑ INLET COWLING A
- ❑ MAIN DRIVE PLANET GEAR – 1
- ❑ MAIN DRIVE PLANET GEAR – 2
- ❑ MAIN DRIVE PLANET GEAR – 3
- ❑ MAIN DRIVE SUN GEAR
- ❑ PROP CONTROL PLANET GEAR – 1
- ❑ PROP CONTROL PLANET GEAR – 2
- ❑ PROP CONTROL PLANET GEAR – 3
- ❑ PROP CONTROL RING GEAR
- ❑ PROP CONTROL SUN GEAR
- ❑ PLANET CARRIER

Required Non-Printed Parts:

❑ M3x8MM Hex Socket Screws	12x
❑ 8MM Bearings	4x
❑ 20MM Bearings	2x



FP3
1x



8MM Bearing
1x

17

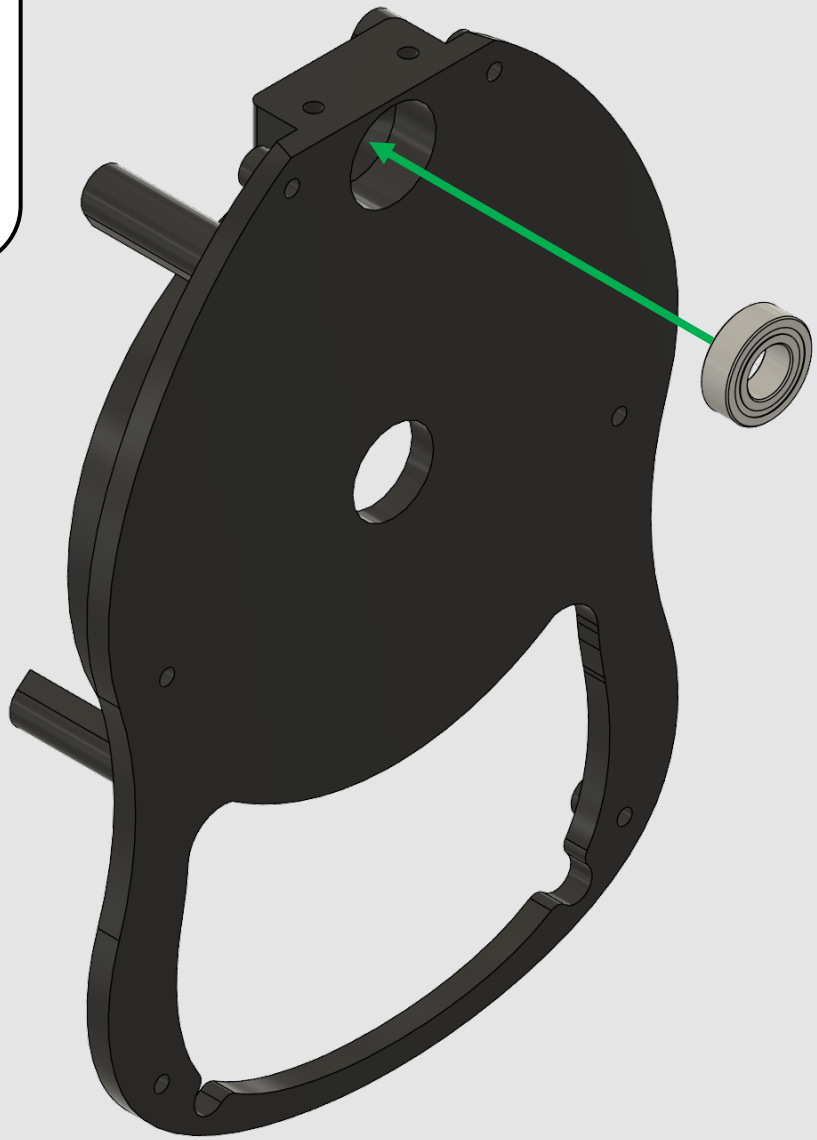



PLANET CARRIER
1x



8MM Bearing
3x

18

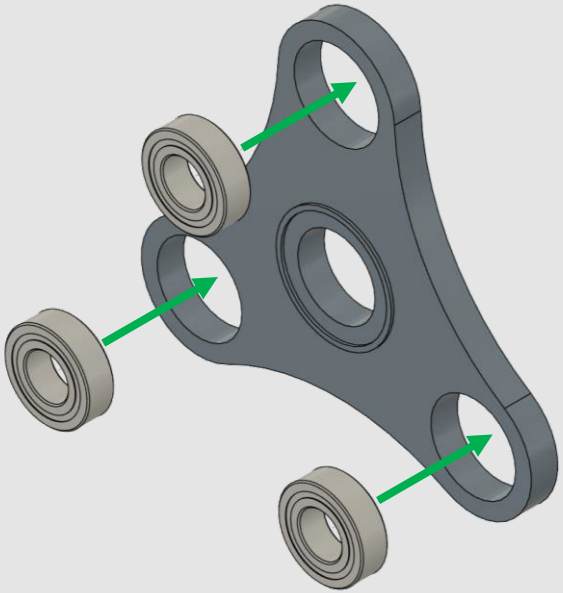

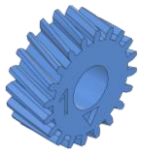

PROP CONTROL PLANET GEARS – 1, 2 & 3



MAIN DRIVE PLANET GEARS – 1, 2 & 3

19

Ensure the numbers on both sets of planet gears match as shown.

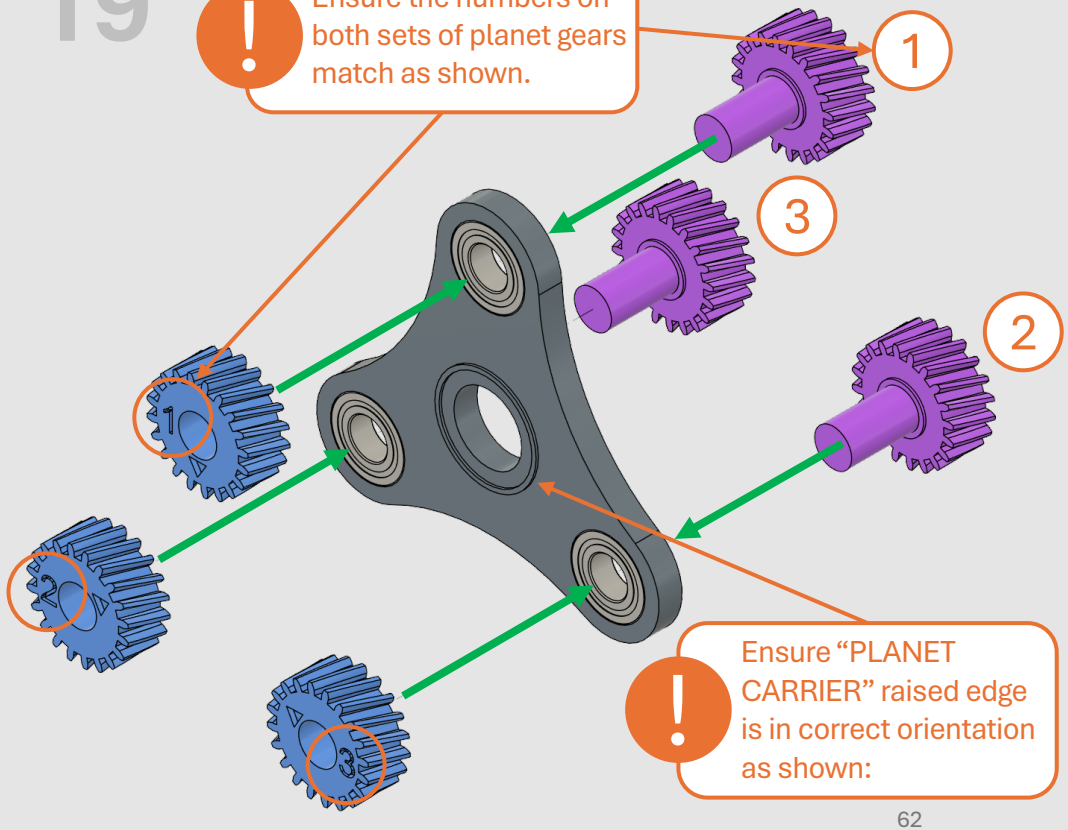

Ensure “PLANET CARRIER” raised edge is in correct orientation as shown:

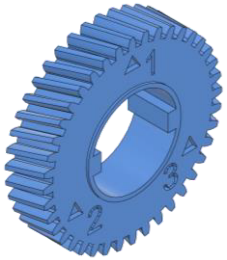

PROP CONTROL SUN GEAR
1x

Each “PLANET GEAR” should smoothly rotate independently. If not, lightly sand the shafts of “MAIN DRIVE PLANET GEARS”.

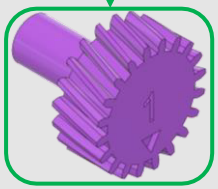

20

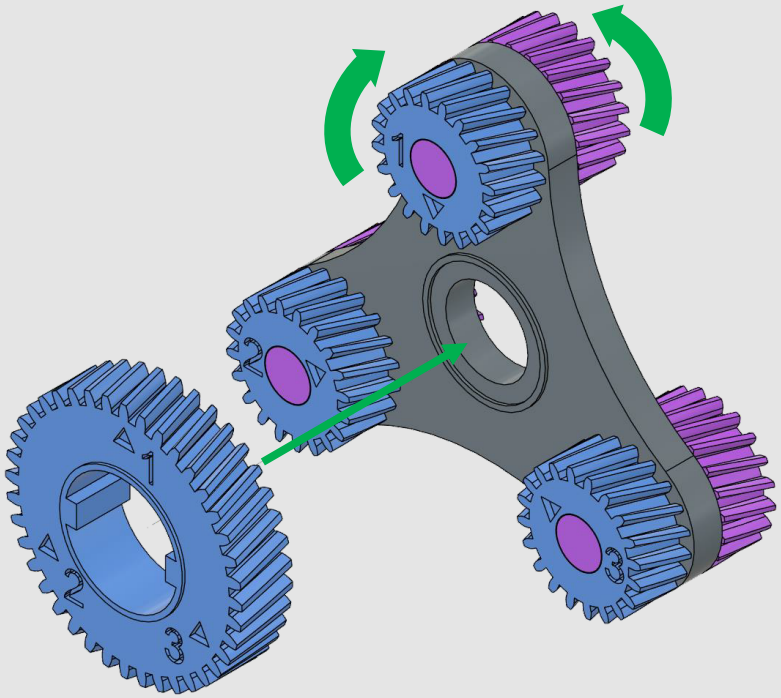

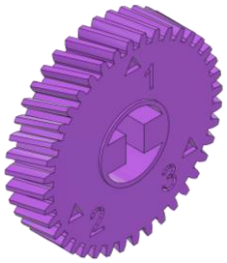

MAIN DRIVE SUN GEAR
1x

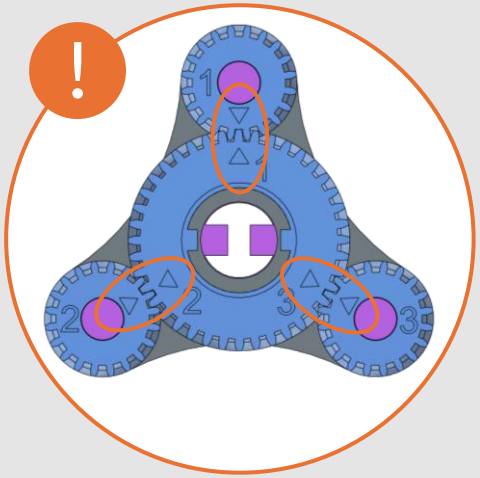

Ensure to match the corresponding numbers and indicators on each “SUN” & “PLANET” gears:

21

ROTATE

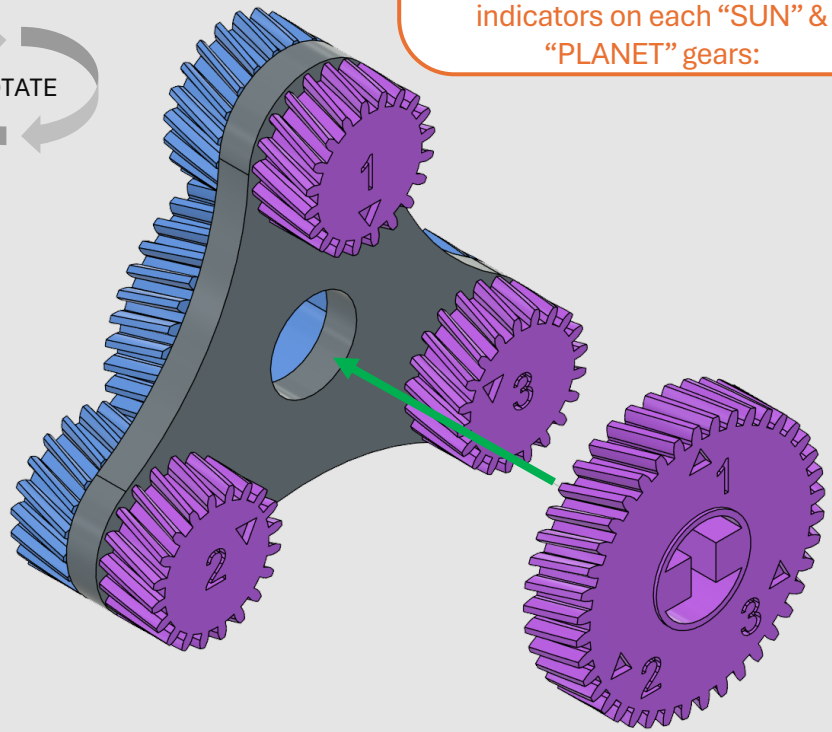



FP3
1x

22

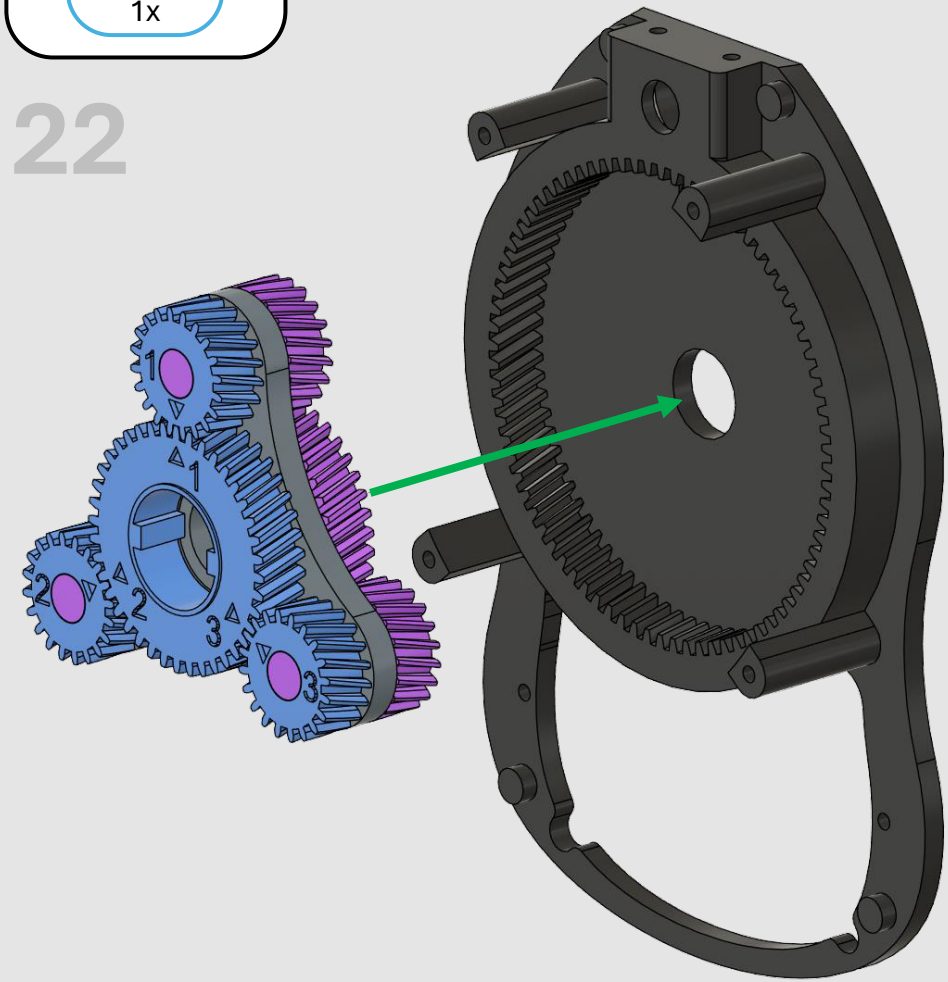

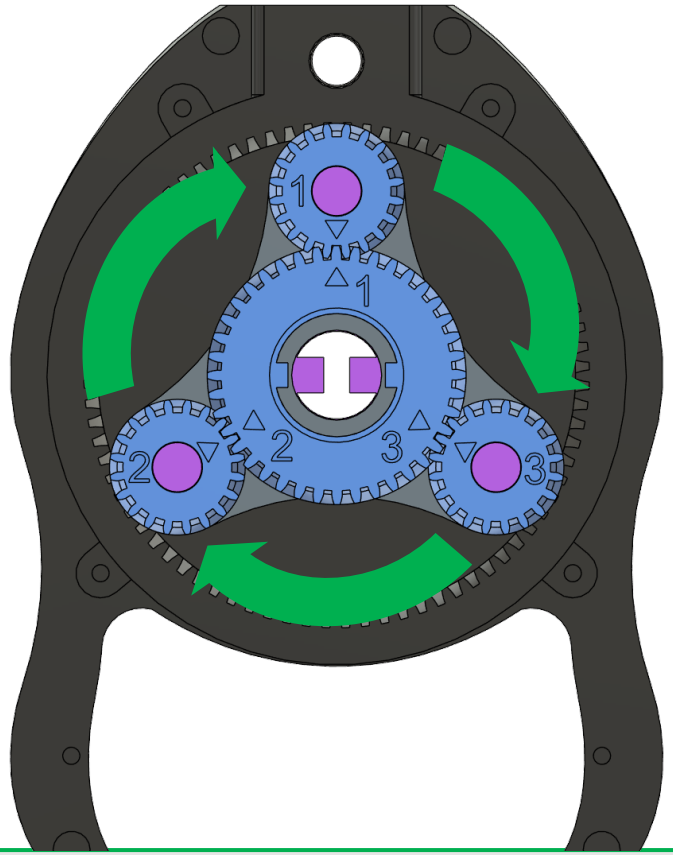

Rotate the double planetary gearbox set to ensure smooth movement. Return to original position as shown:

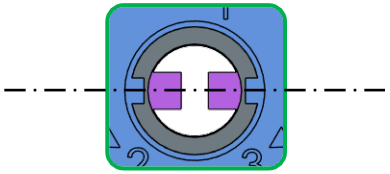

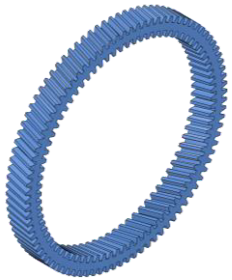

PROP CONTROL
RING GEAR
1x

23

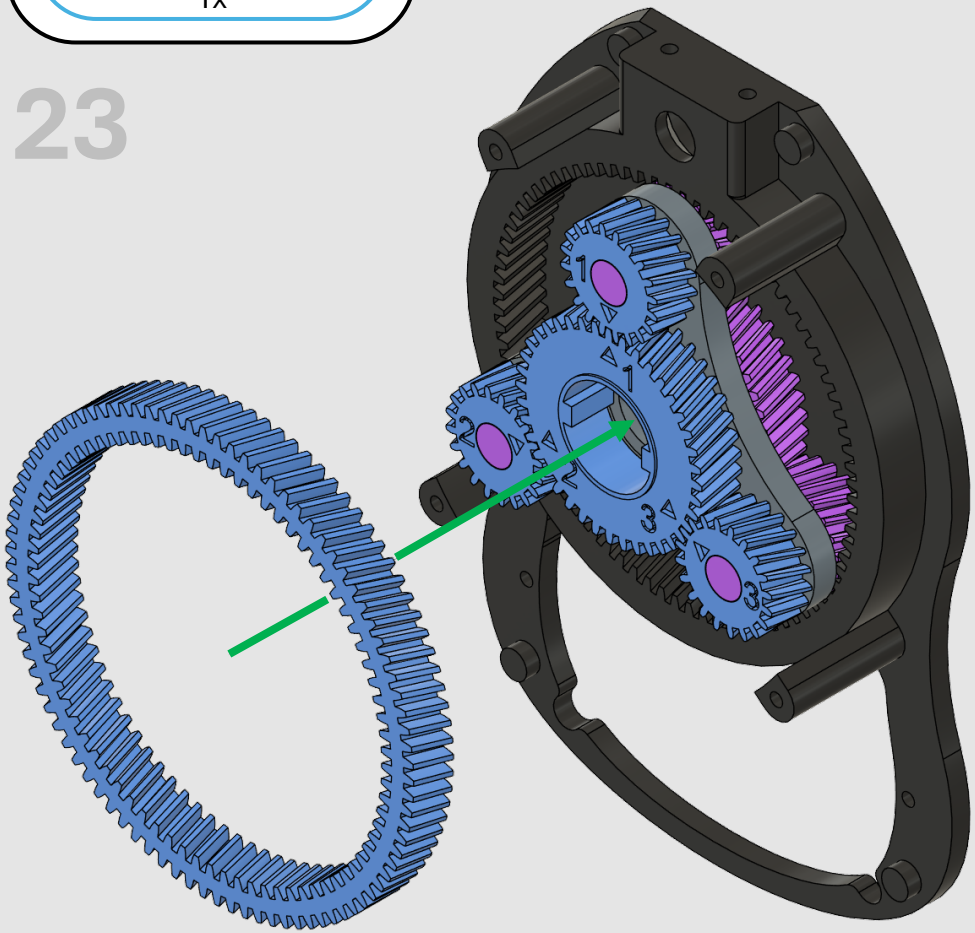

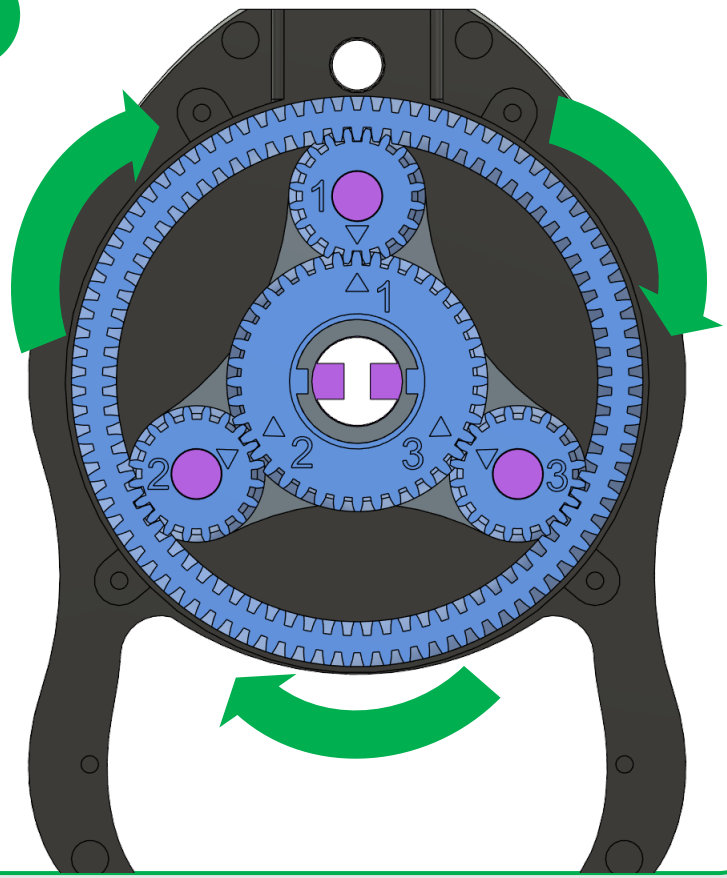

Rotate “PROP CONTROL RING GEAR” to ensure smooth movement. If not, you may be off by one tooth. Remove and resit.
Return both sun gears to original position as shown:

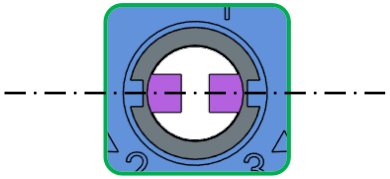



FP1
1x



20MM Bearing
1x

24

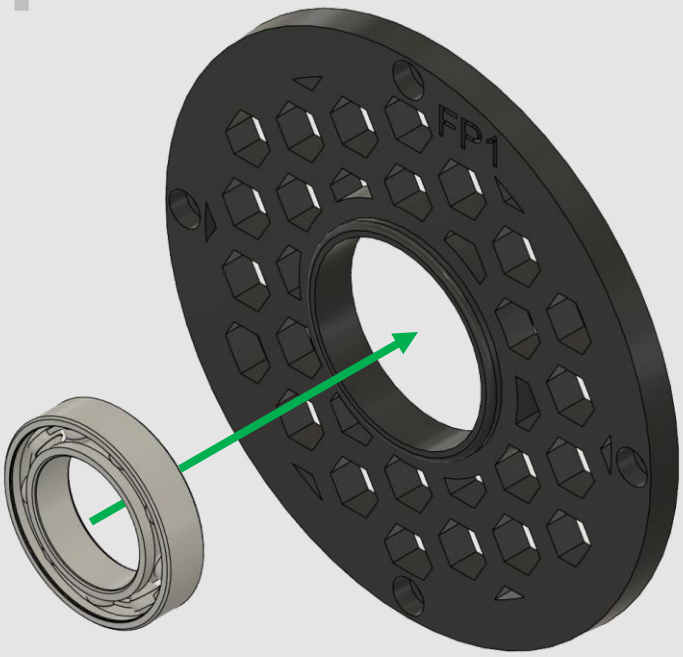



FP2
1x



20MM Bearing
1x

25

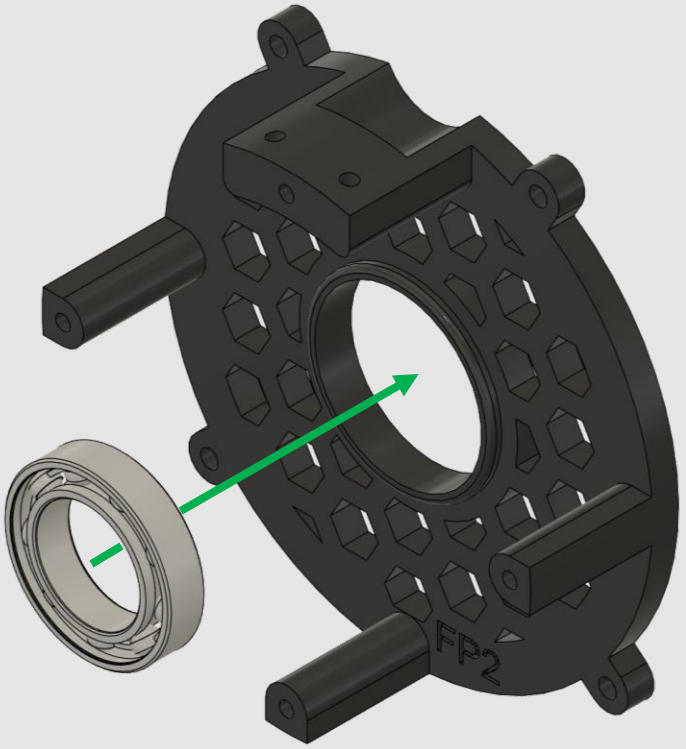

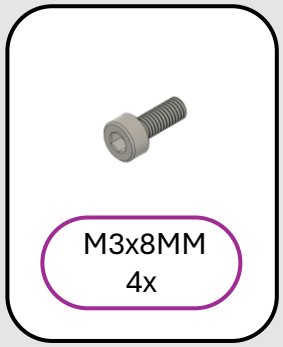

M3x8MM
4x

26



M3x8MM
4x

27

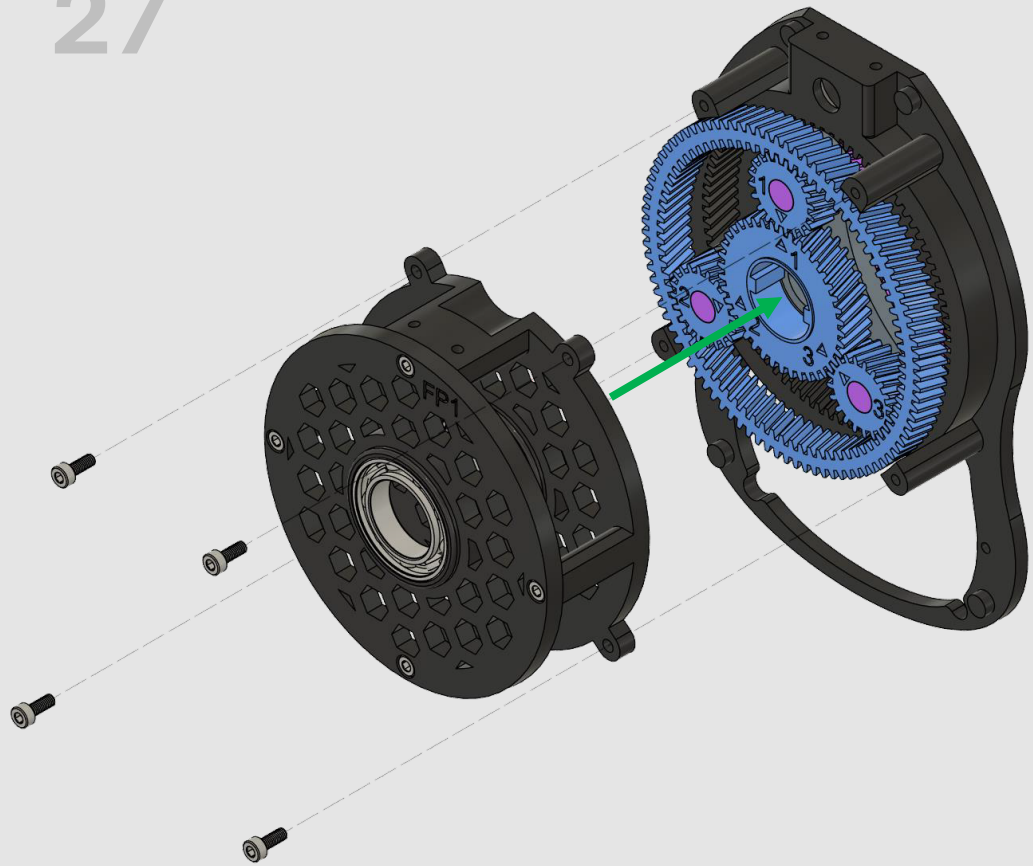





INLET A
1x

M3x8MM
2x

28

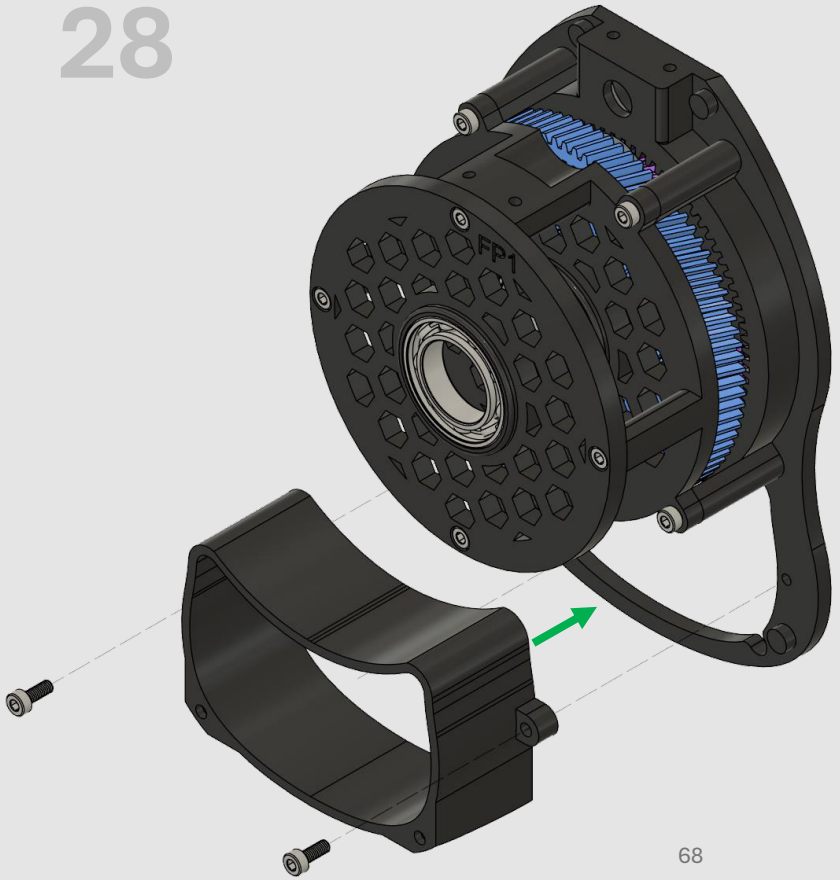

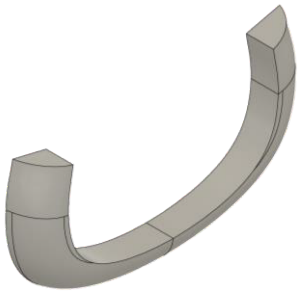

INLET COWLING A
1x



M3x8MM
2x

29

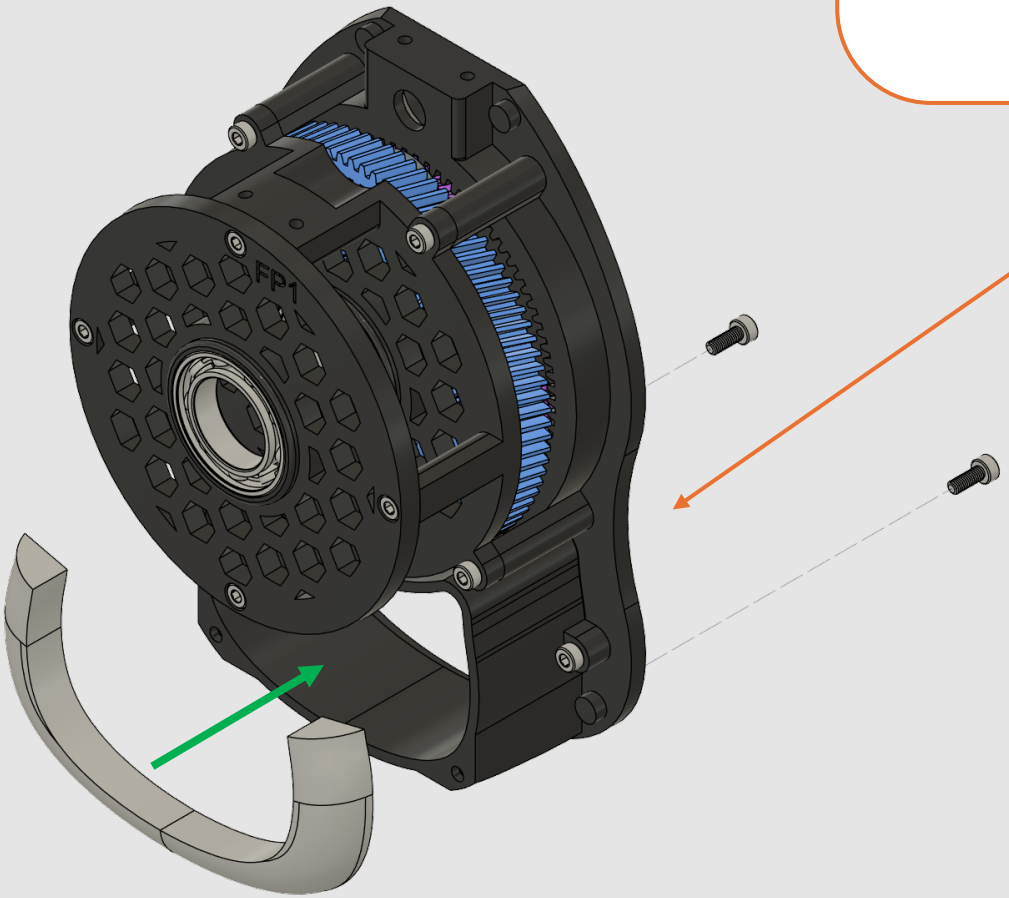



Frame Subassembly A Completed!

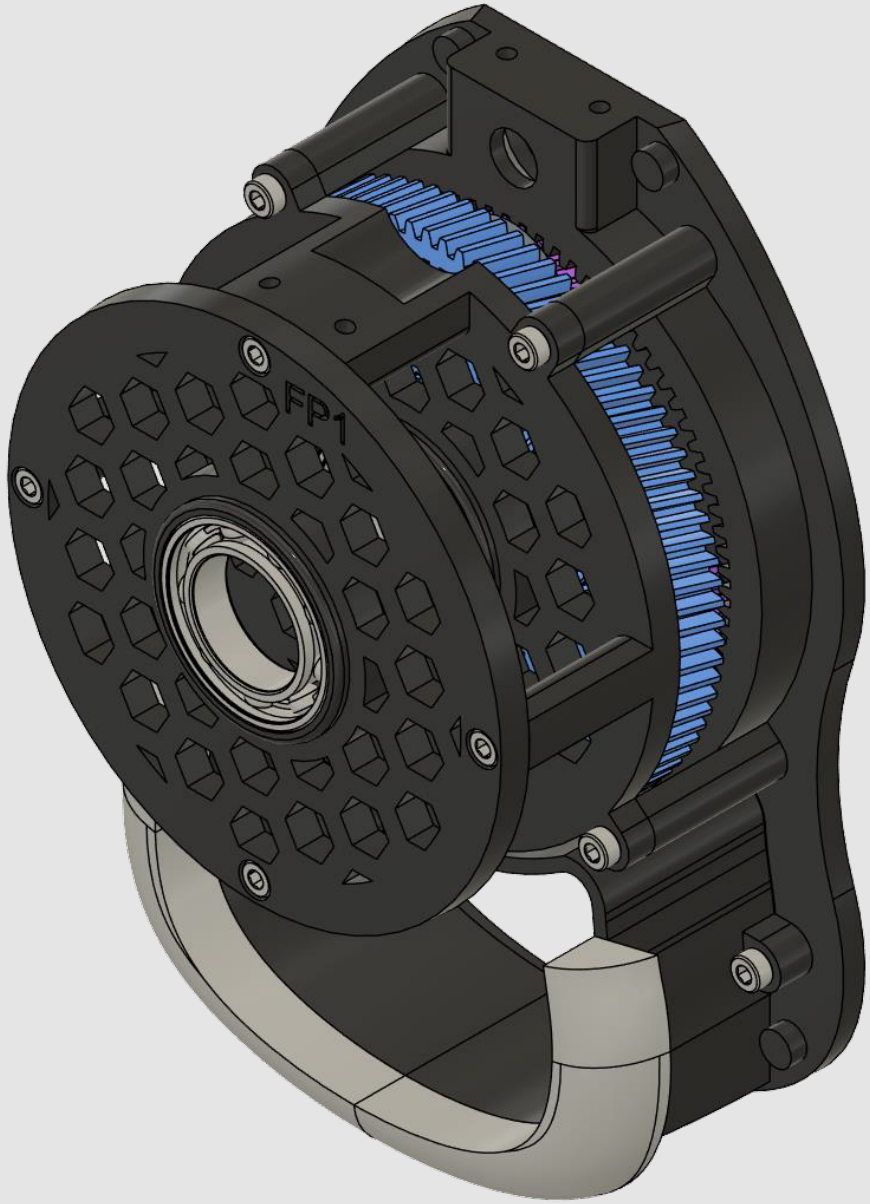

3. Frame Subassembly B

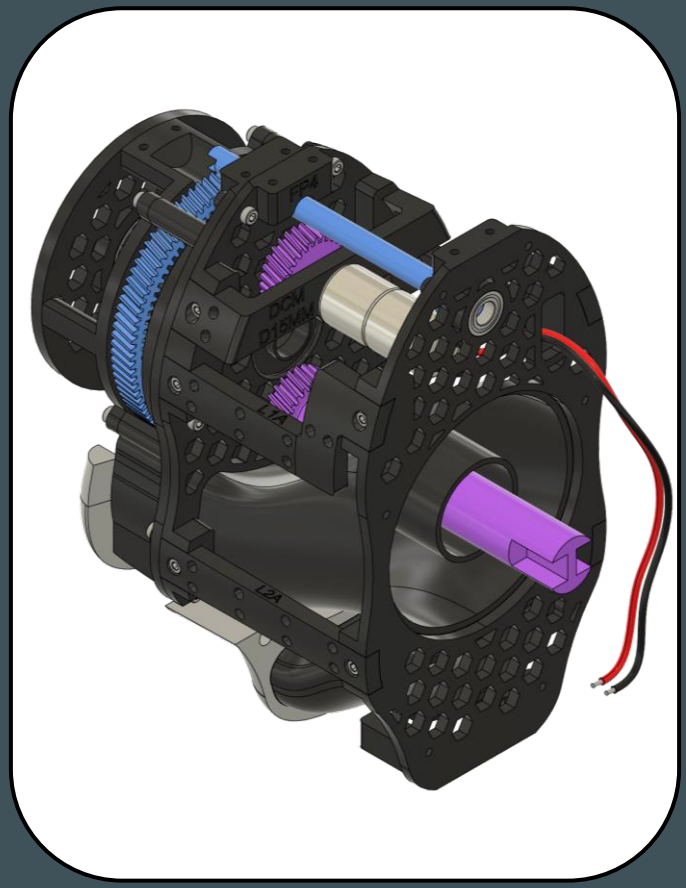

Required 3D Printed Parts:

- ❑ FP4
- ❑ FP5
- ❑ L1A
- ❑ L1B
- ❑ L2A
- ❑ L2B
- ❑ INLET B
- ❑ INLET C
- ❑ INLET COWLING B
- ❑ DC MOTOR MOUNT
- ❑ PROP CONTROL SERVO SHAFT
- ❑ DC MOTOR POWER GEAR
- ❑ POWER SHAFT TRANSFER GEAR
- ❑ POWER SHAFT A
- ❑ C-CLIP SIZE A

Required Non-Printed Parts:

❑ M3x8MM Hex Socket Screws	23x
❑ M3x2.5MM Hex Socket Screws	2x
❑ 8MM Bearings	1x
❑ 20MM Bearings	1x
❑ 77RPM DC Motor (Pre-wired)	1x



FP4
1x



M3x8MM
6x

30

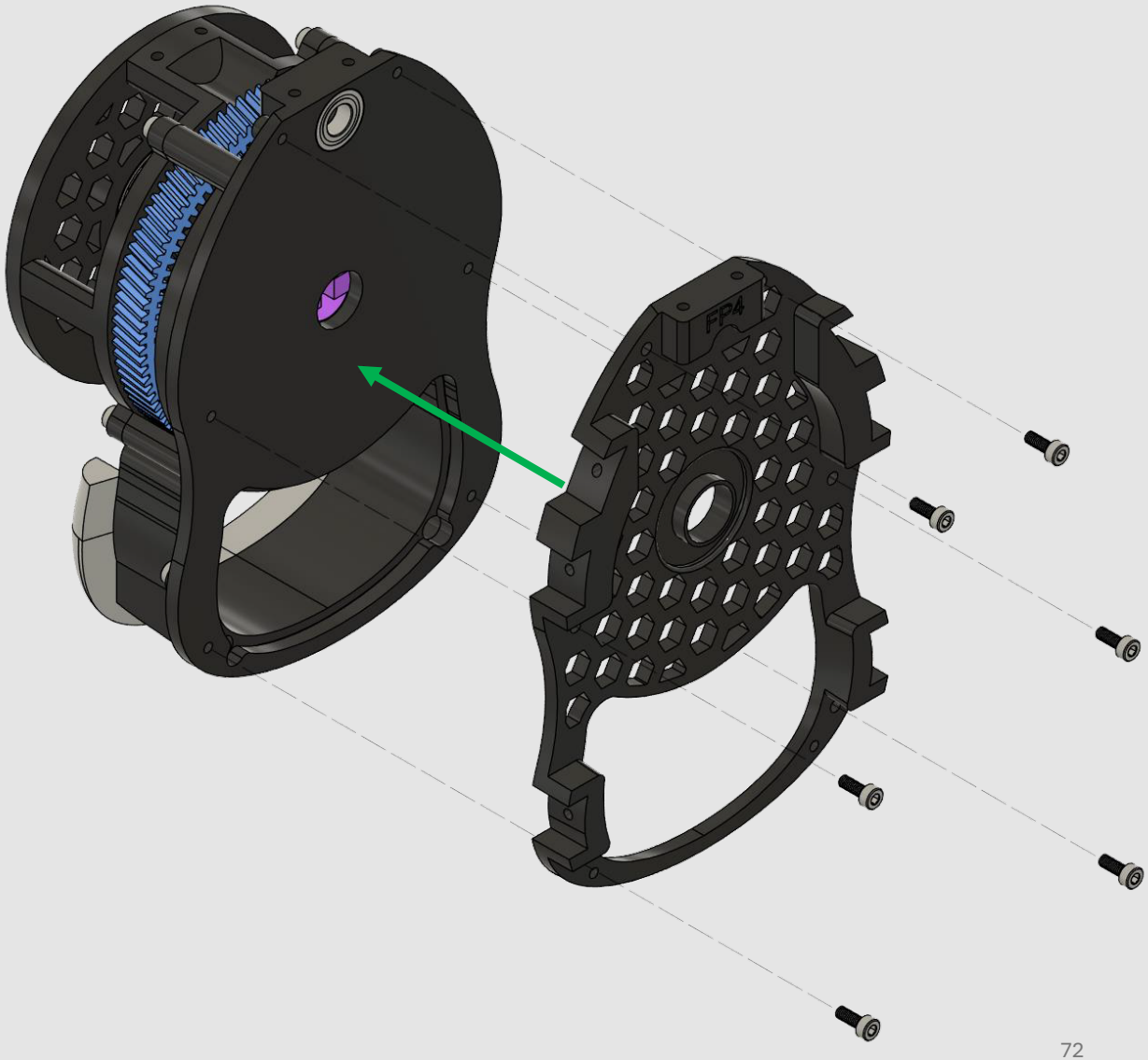



DC MOTOR MOUNT
1x



70 RPM DC MOTOR (WIRED)
1x



M2.5x6MM
2x

31

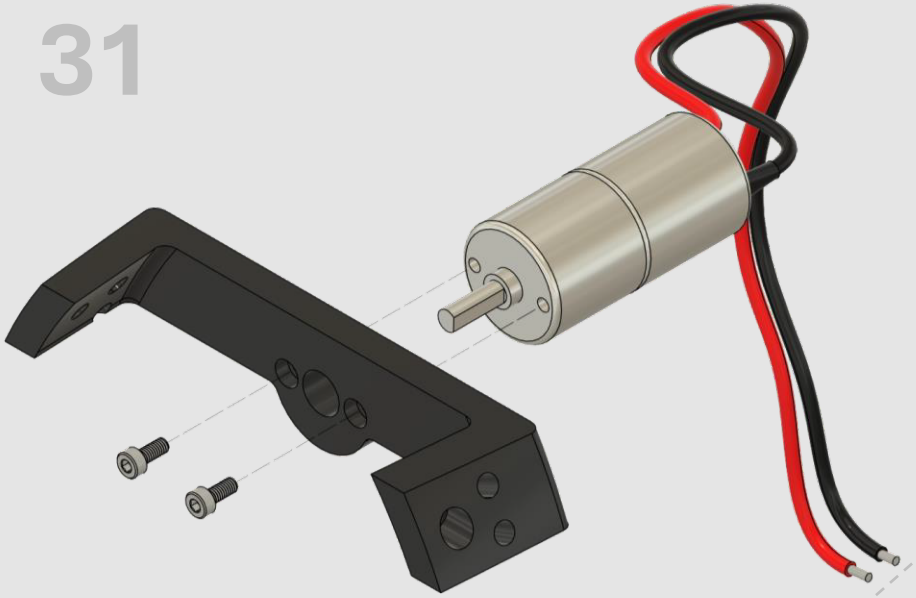

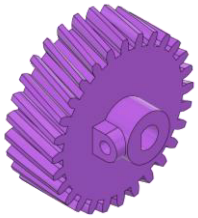

DC MOTOR POWER GEAR
1x

32

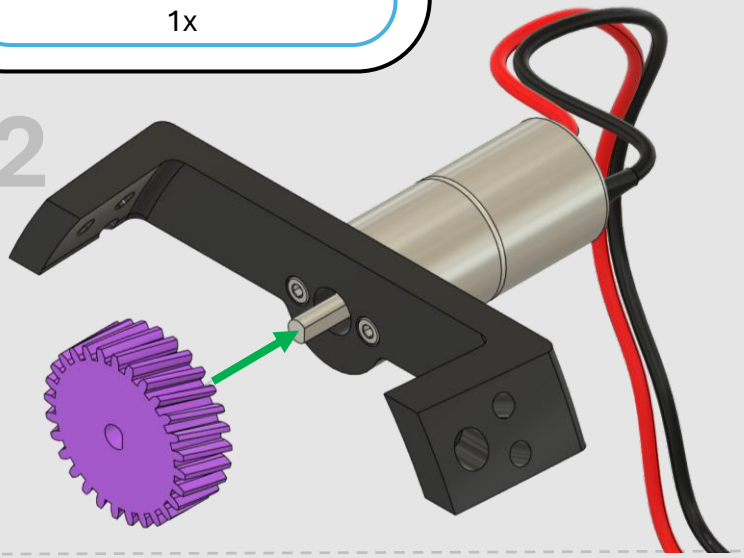



M2.5x6MM
1x

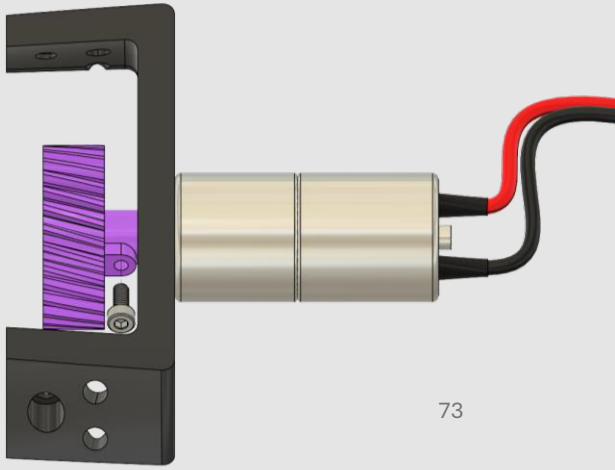

33

34

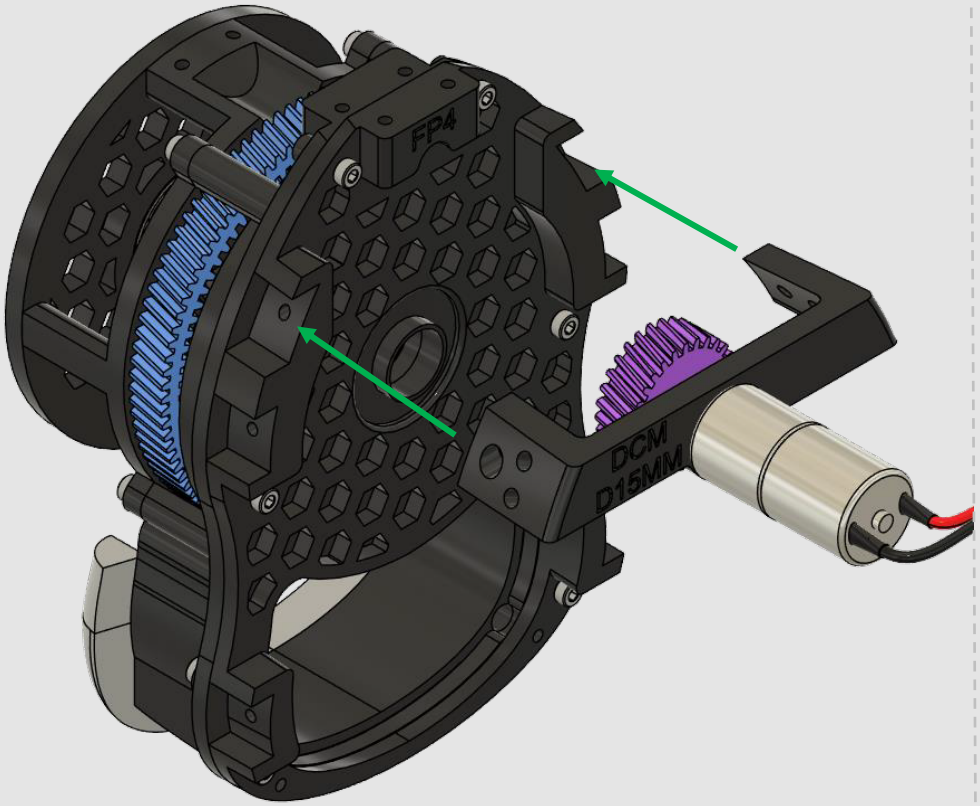

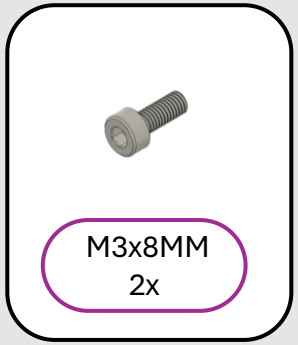

35

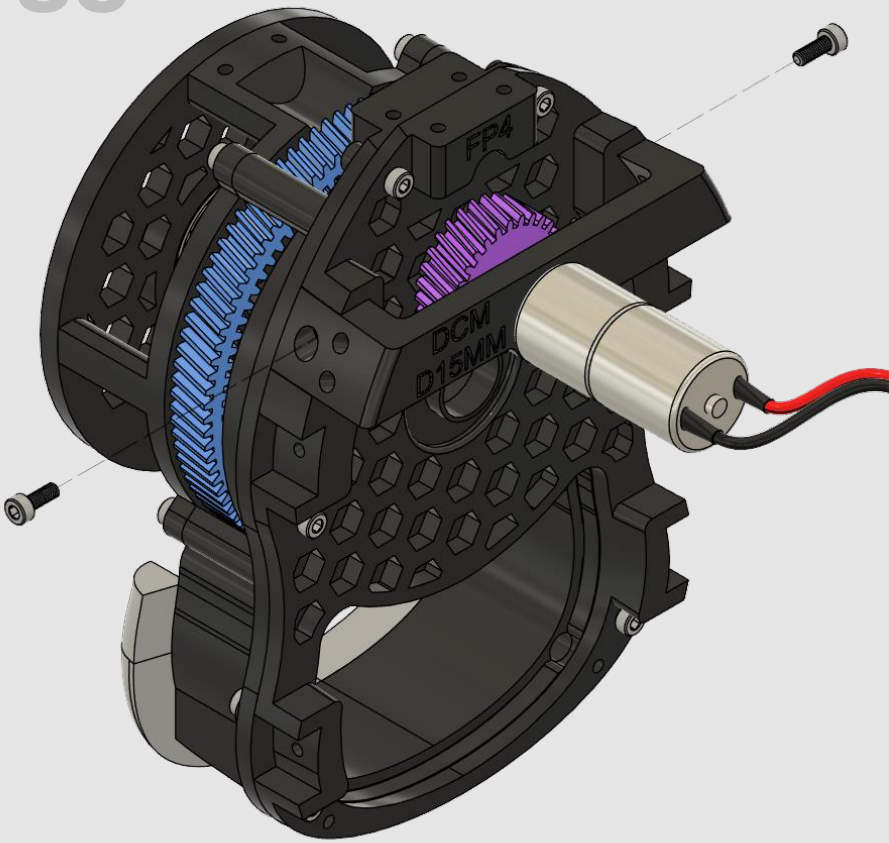



L1A
1x



L1B
1x



L2A
1x



L2B
1x



M3x8MM
4x

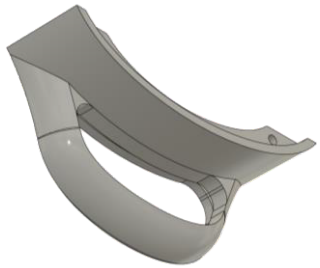

INLET COWLING B
1x



M3x8MM
2x

36

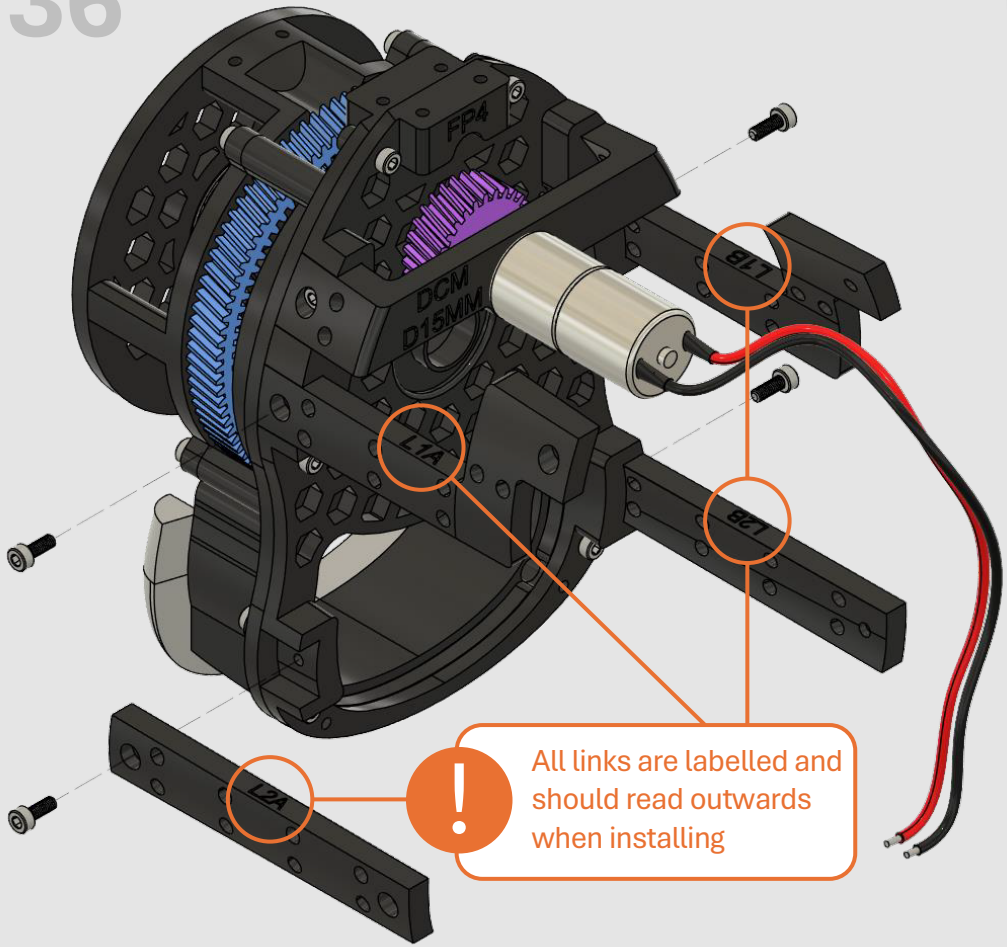

37

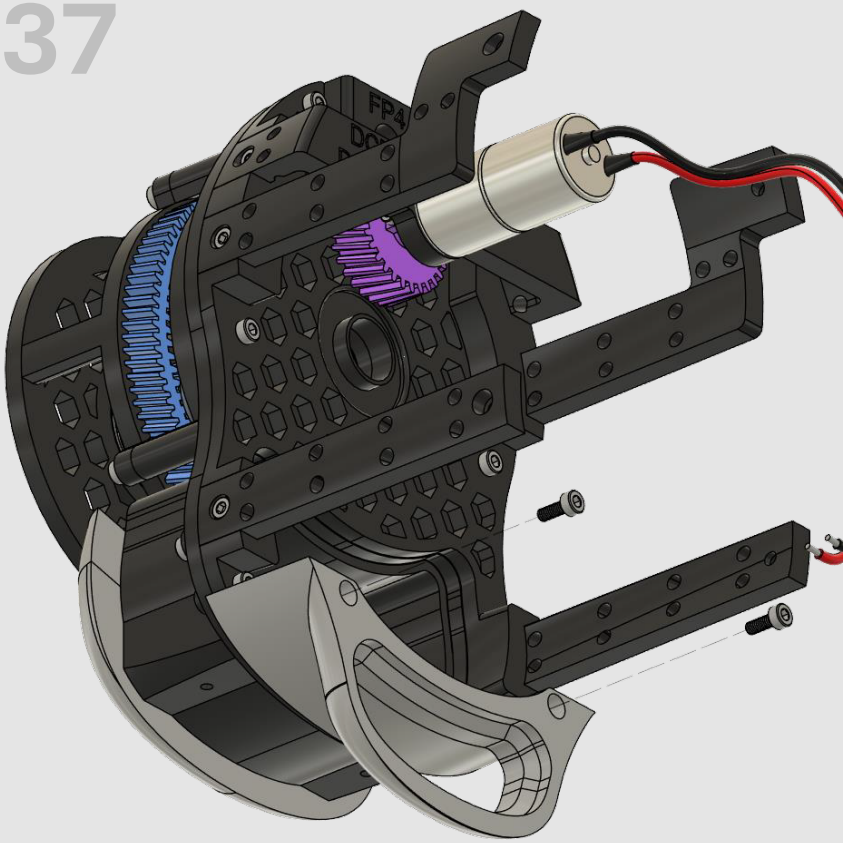

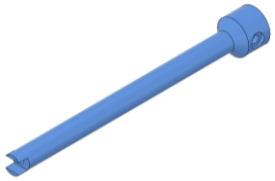

PROP CONTROL SHAFT
1x

38

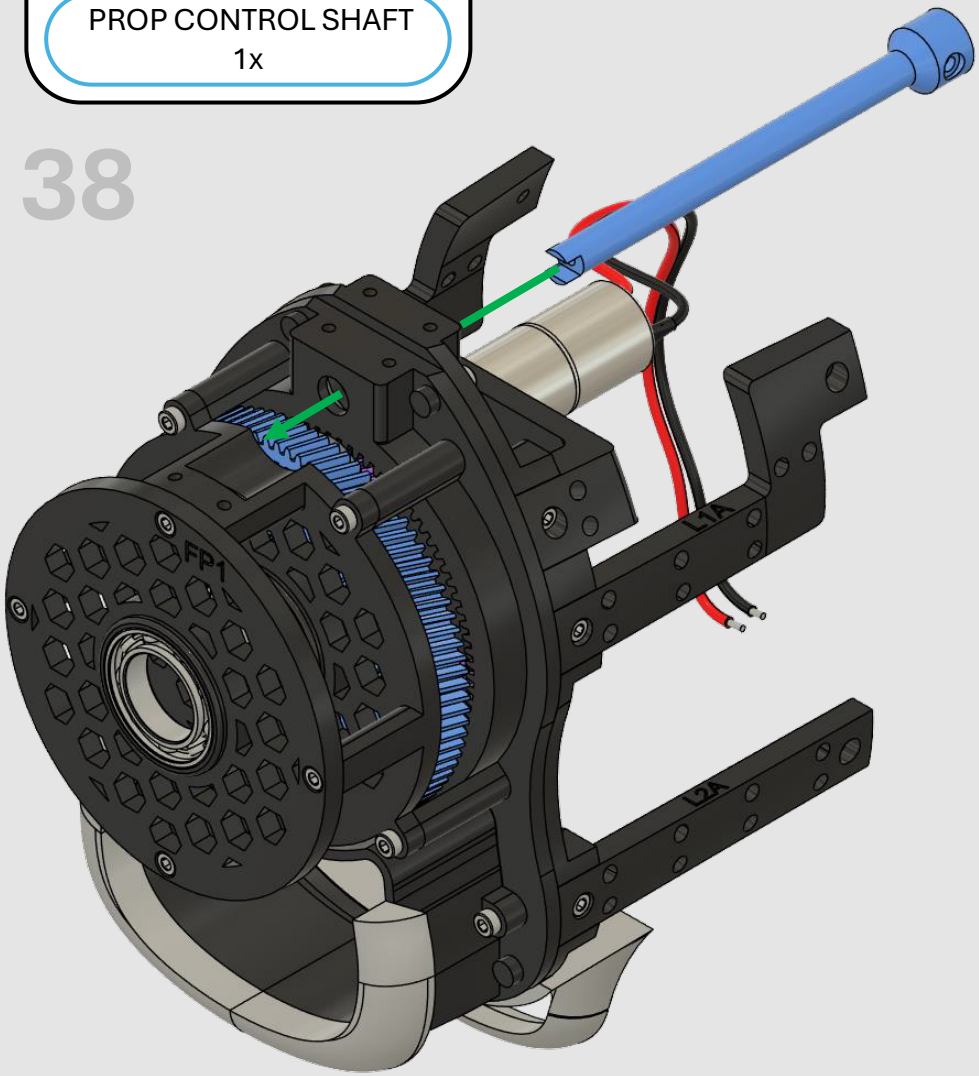

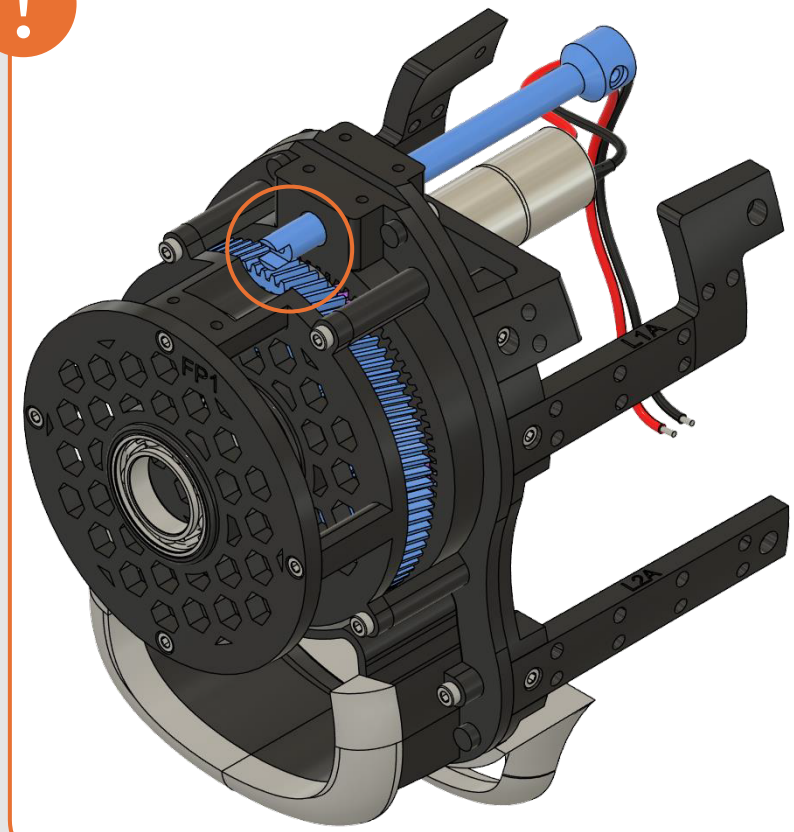

Loosely insert “PROP CONTROL SHAFT” as shown. We will attach it in the next section.



INLET B
1x



20MM Bearing
1x

39

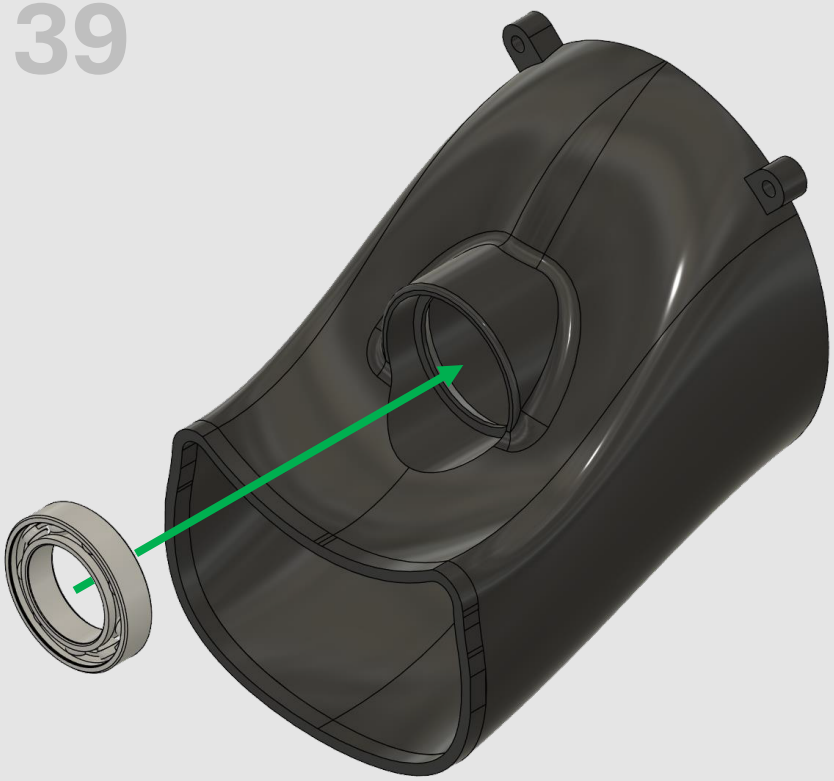



FP5
1x



8MM Bearing
1x



M3x8MM
2x

40

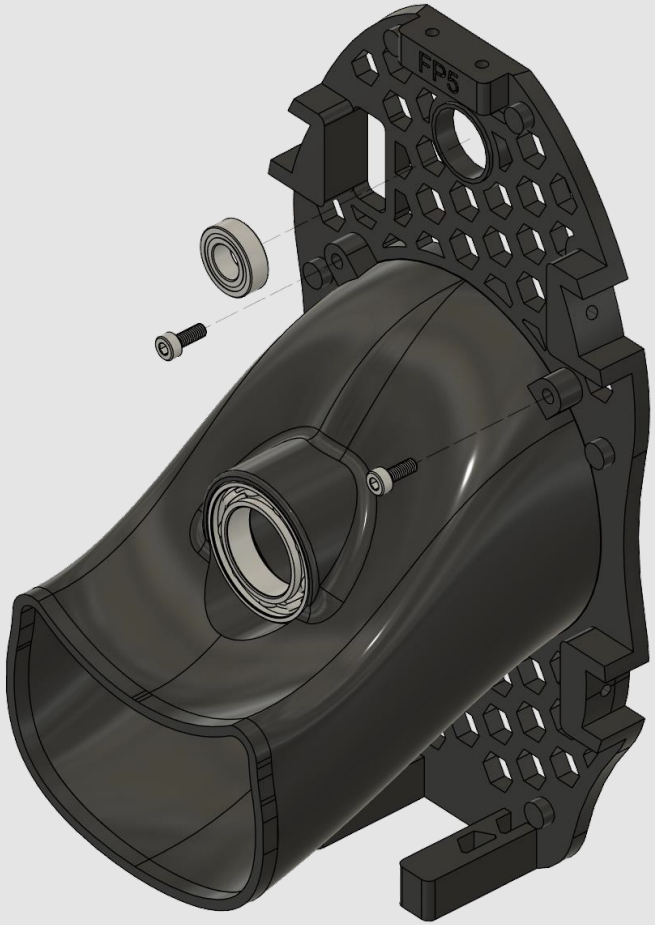



POWER SHAFT A
1x



POWER SHAFT
TRANSFER GEAR
1x



C-CLIP SIZE A
1x



M3x8MM
1x

41

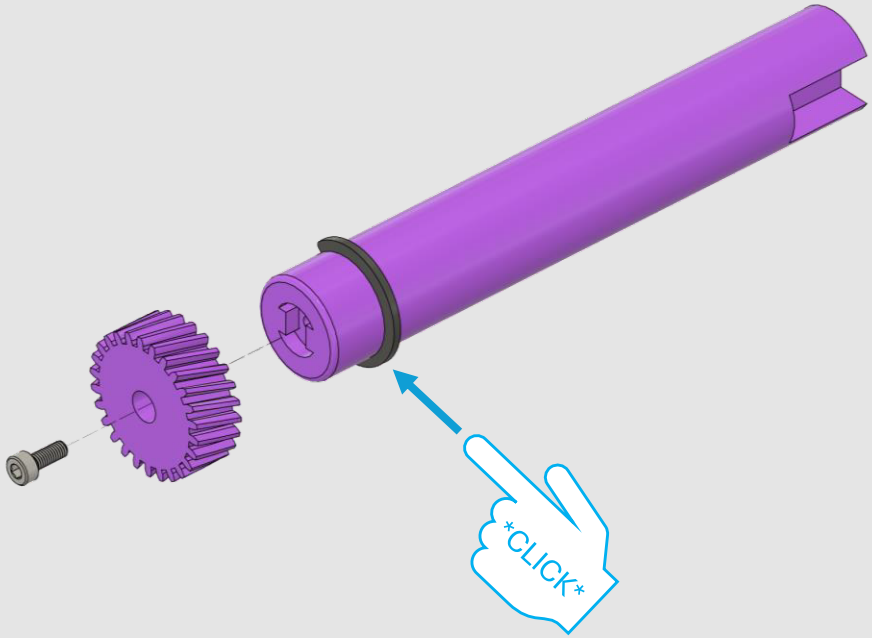

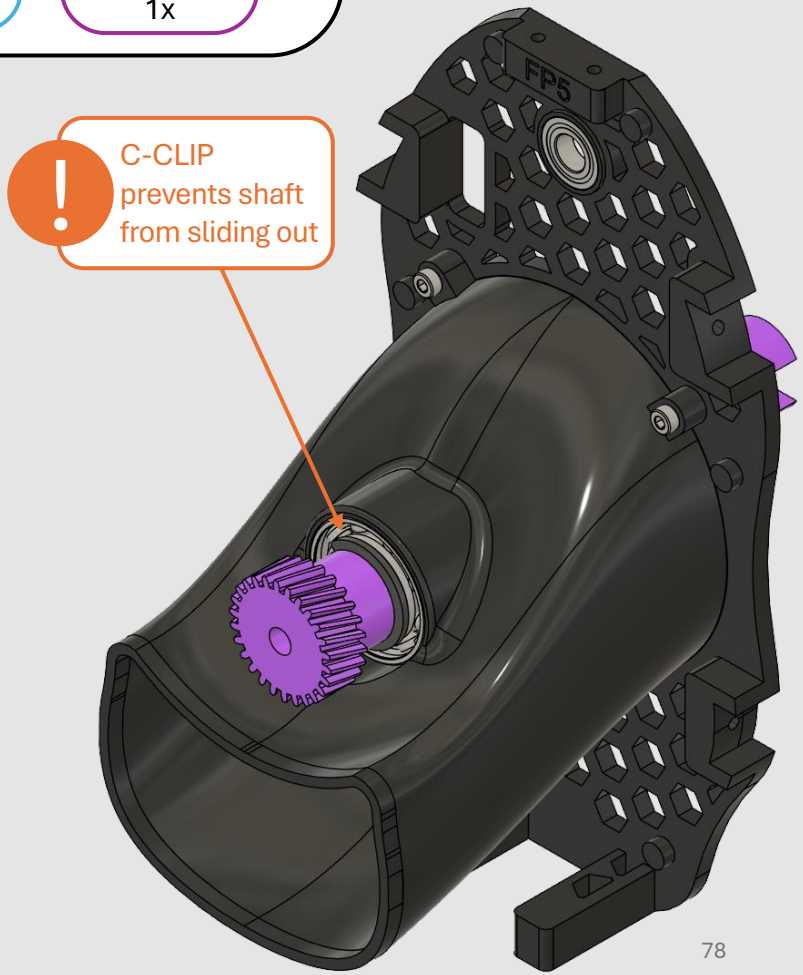



INLET C
1x



M3x8MM
2x

42

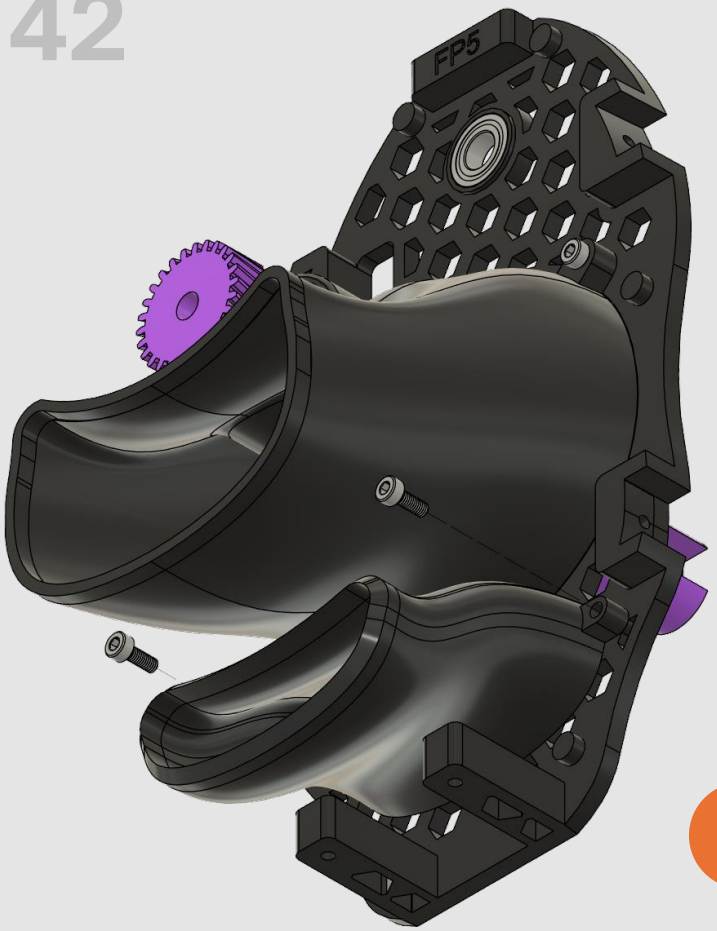



M3x8MM
4x

43

Ensure to feed DC motor wires through the rectangular slot on “FP4” as shown:



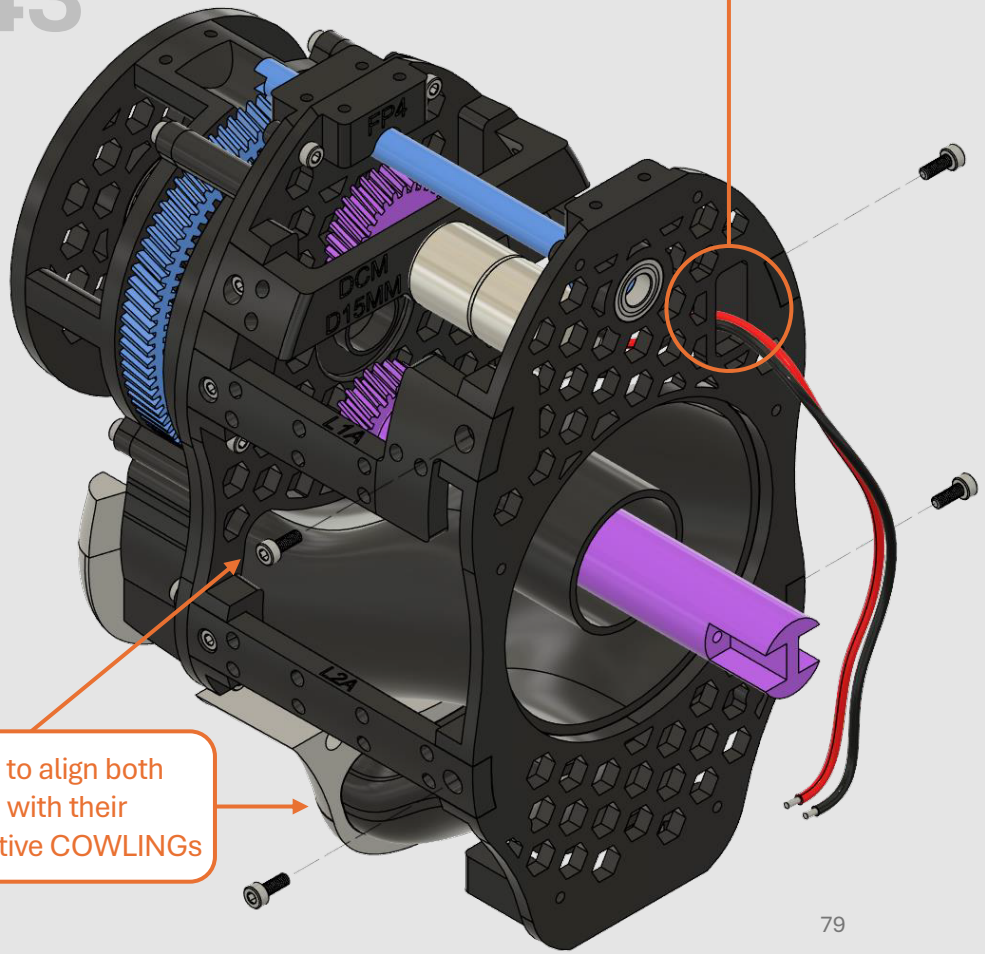

Ensure to align both INLETs with their respective COWLINGs

Frame Subassembly B Completed!

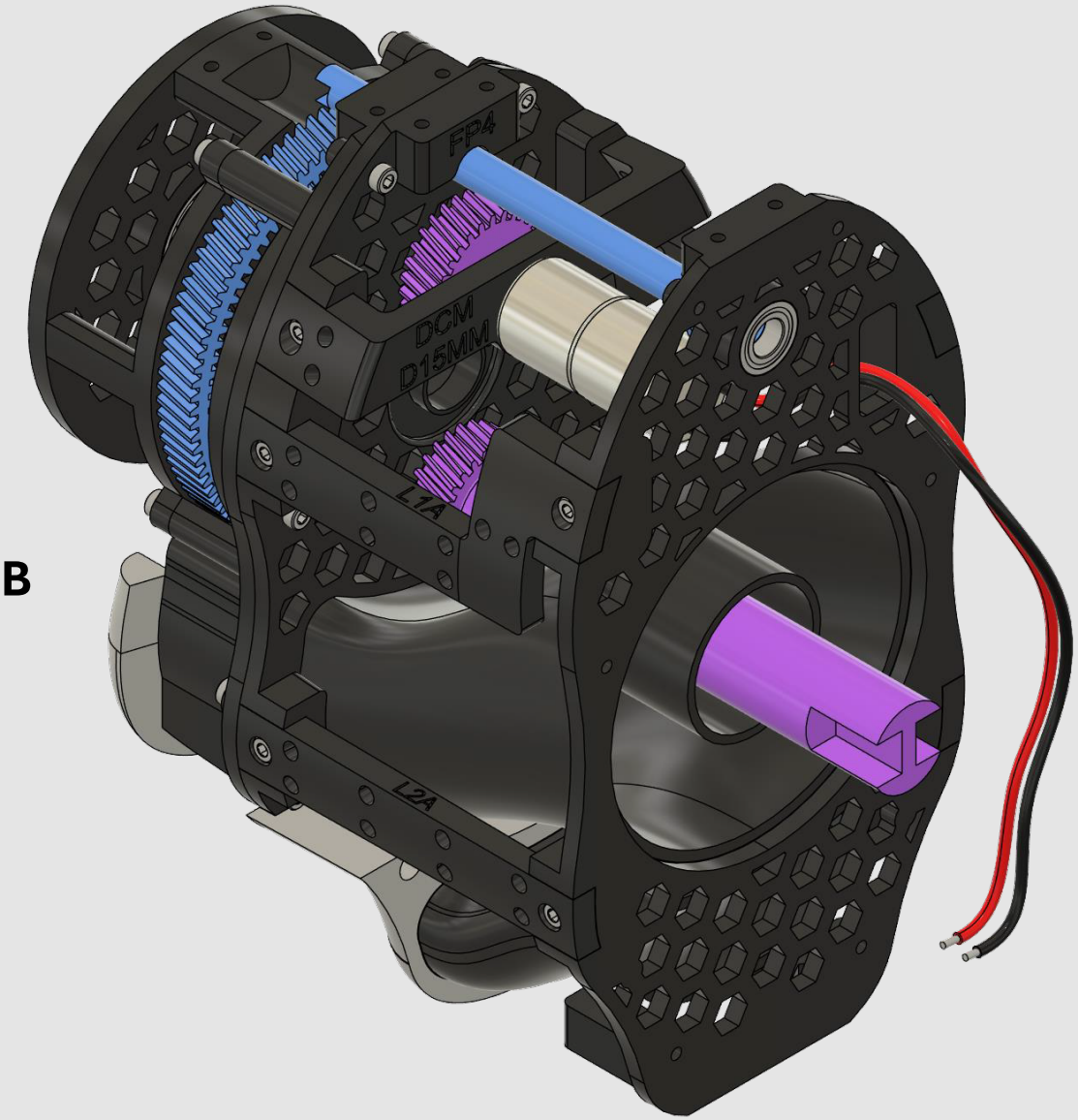

4. Frame Subassembly C

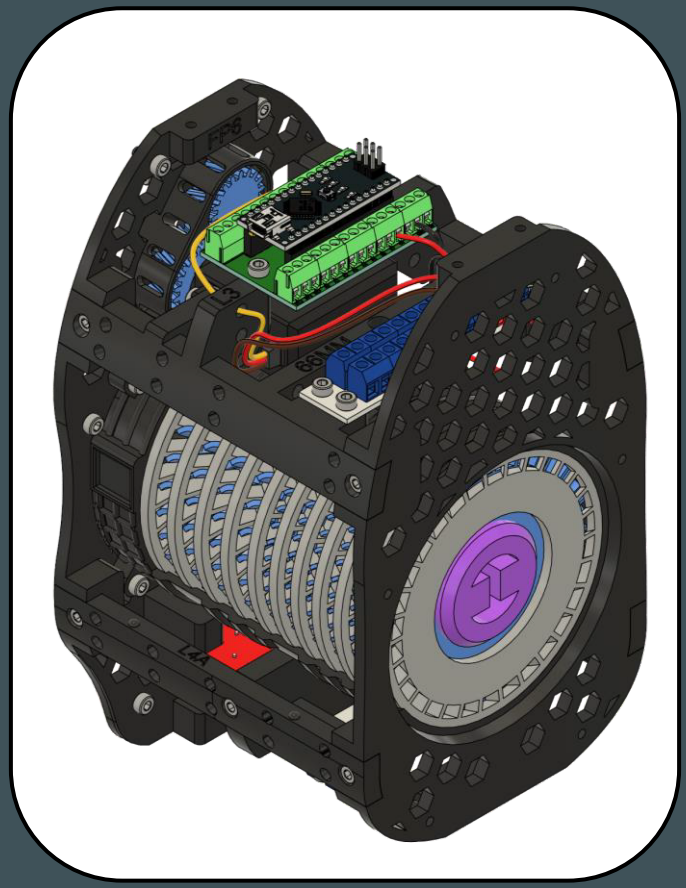

Required 3D Printed Parts:

- ❑ FP6
- ❑ FP7
- ❑ L3 66MM
- ❑ L4A
- ❑ L4B
- ❑ L4C
- ❑ INLET D
- ❑ COMPRESSOR CASING
- ❑ PROP CONTROL GEAR A
- ❑ PROP CONTROL GEAR B
- ❑ POWER SHAFT B
- ❑ HPC – 1
- ❑ HPC – 2
- ❑ HPC – 3
- ❑ HPC – 4
- ❑ HPC – 5
- ❑ HPC – 6
- ❑ HPC – 7
- ❑ HPC – 8
- ❑ HPC – 9
- ❑ HPC – 10
- ❑ HPCS – 1
- ❑ HPCS – 2
- ❑ HPCS – 3
- ❑ HPCS – 4
- ❑ HPCS – 5
- ❑ HPCS – 6
- ❑ HPCS – 7
- ❑ HPCS – 8
- ❑ HPCS – 8
- ❑ HPCS – 9
- ❑ HPCS – 10
- ❑ HPCS – 11

Required Non-Printed Parts:

❑ M3x8MM Hex Socket Screws	39x
❑ 8MM Ball Bearing	1x
❑ 20MM Ball Bearing	1x
❑ Arduino/Elegoo NANO Microcontroller	1x
❑ Arduino NANO Expansion I/O Shield	1x
❑ Terminal Power Distribution Board	1x
❑ MG996R/SG-5010 Servo w/ Round Arm Attachment (Wired)	1x
❑ L298N DC Motor Driver	1x



Ensure to feed DC motor wires through the rectangular slot on “FP6” as shown:

44

FP6
1x

M3x8MM
6x

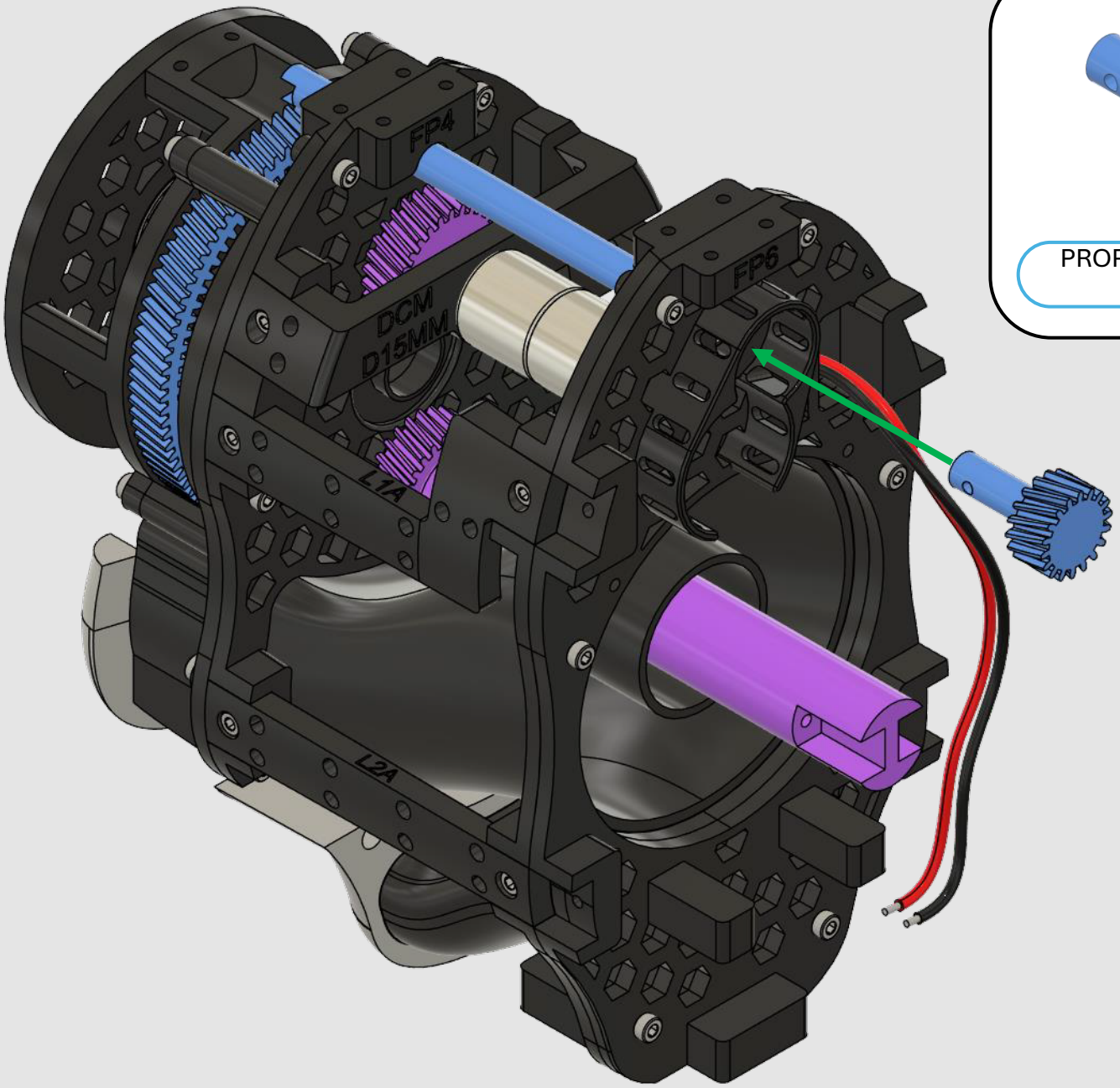

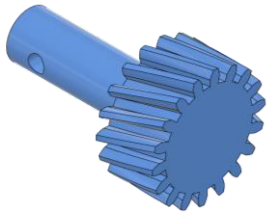

PROP CONTROL GEAR B
1x

45

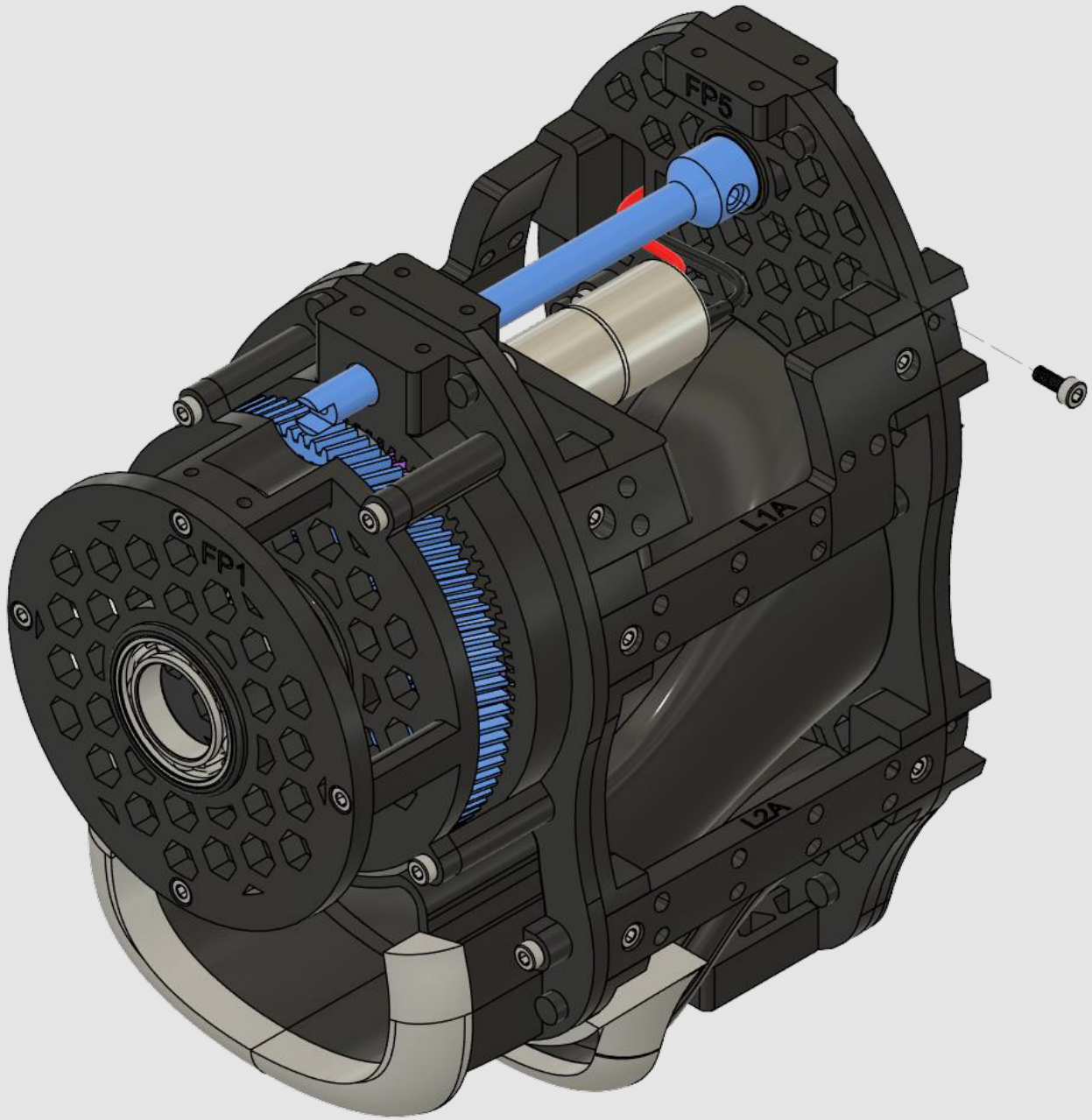



M3x8MM
1x

46



INLET D
1x



20MM Bearing
1x

47

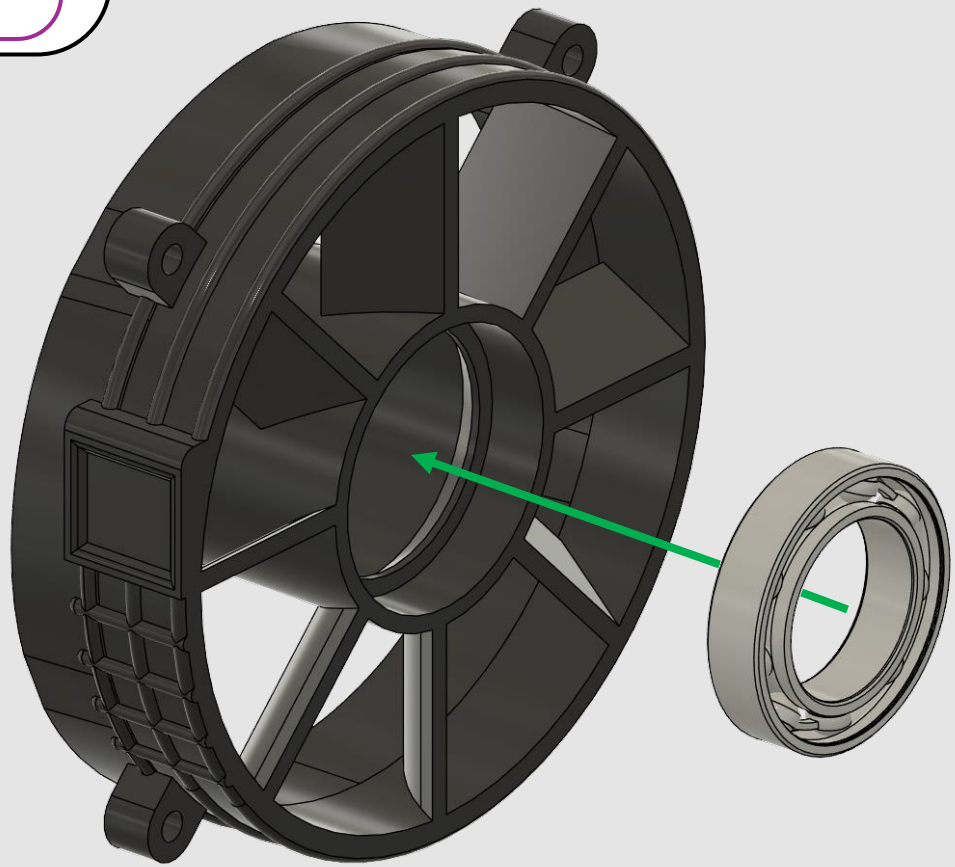

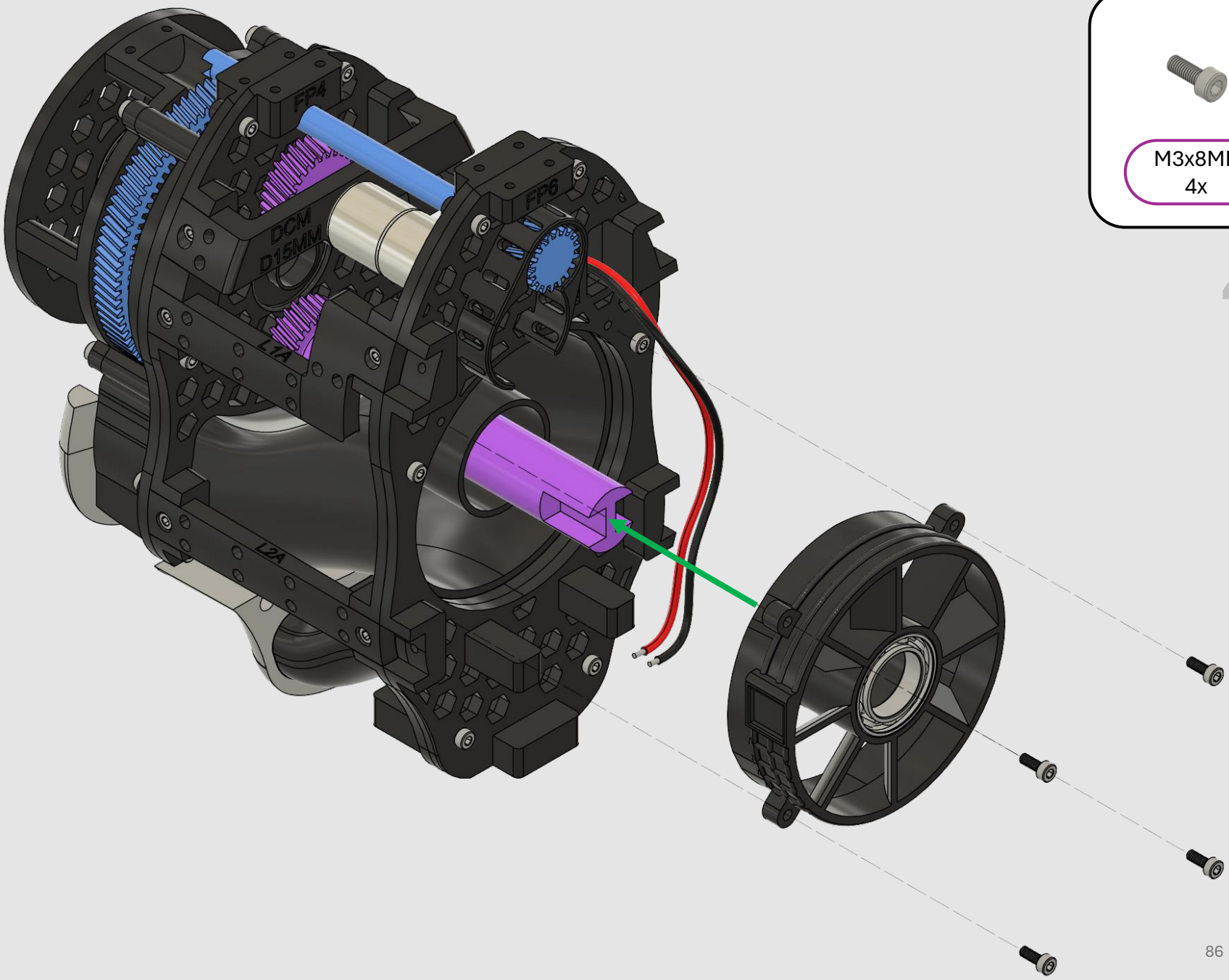

M3x8MM
4x

48

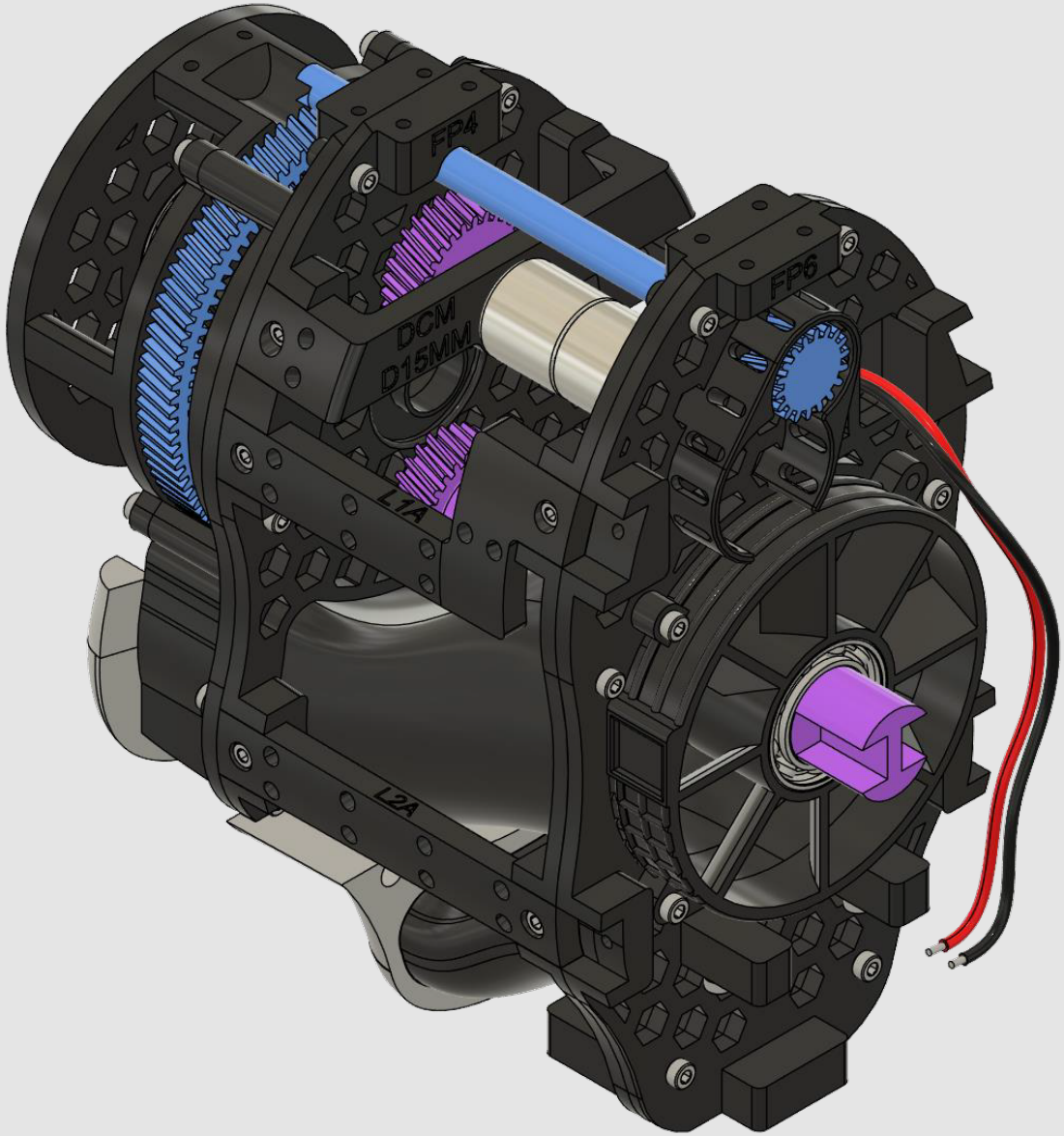

Set aside for now.



L3 66MM
1x

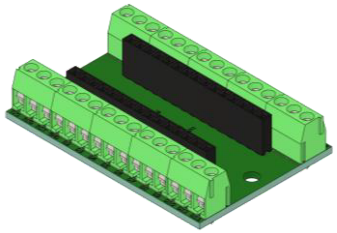

ARDUINO NANO I/O
EXPANSION SHEILD
1x



M3x8MM
2x

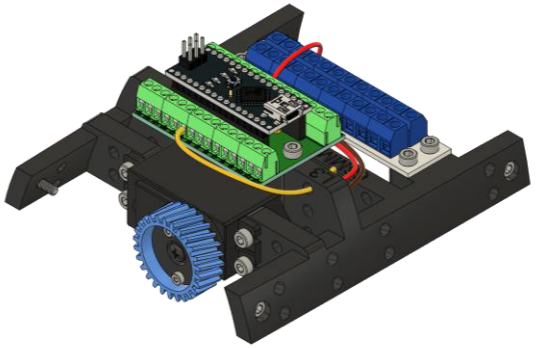

50

Ensure orientation of Arduino shield with TX1 located here.

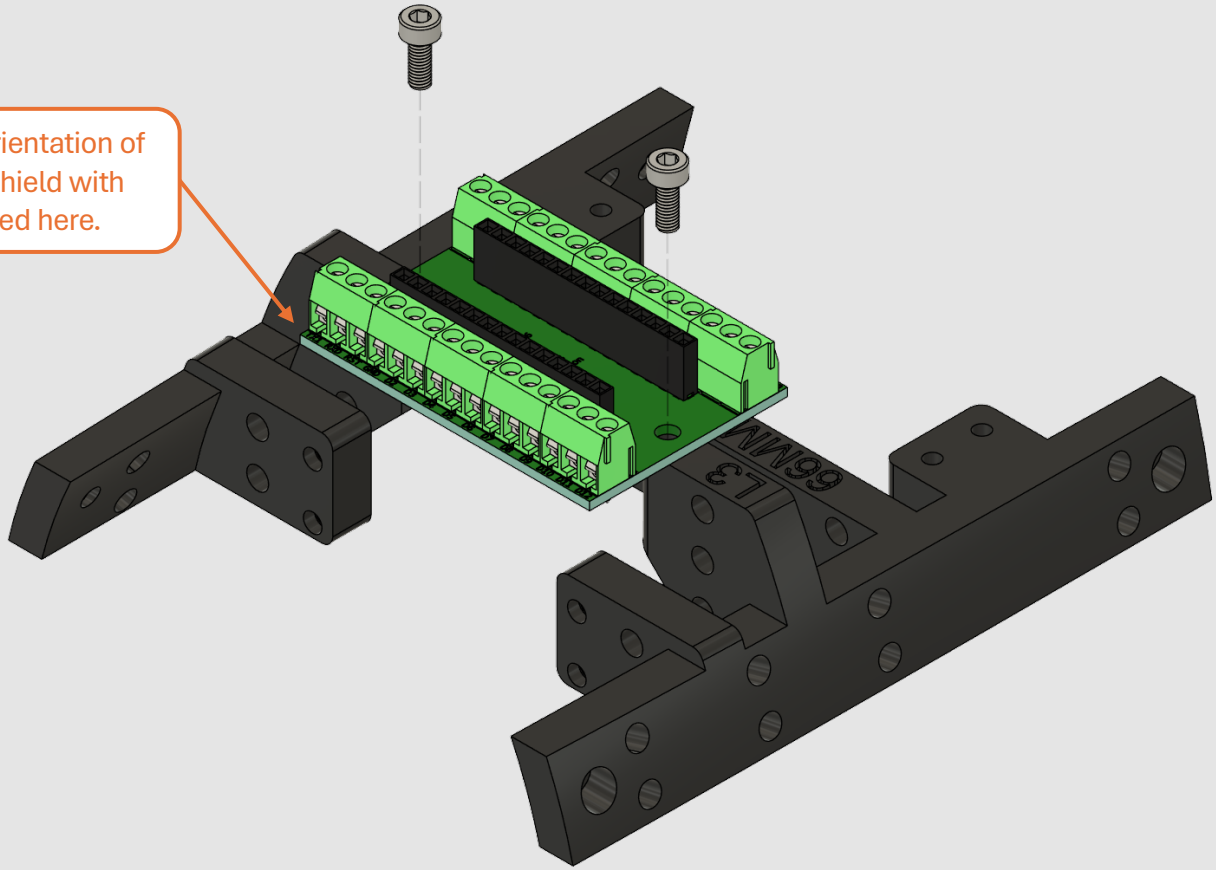

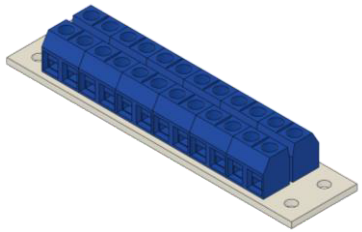

5V TERMINAL POWER DISTRIBUTION BOARD
1x



M3x8MM
4x

51

You can use only 2 bolts here diagonally.

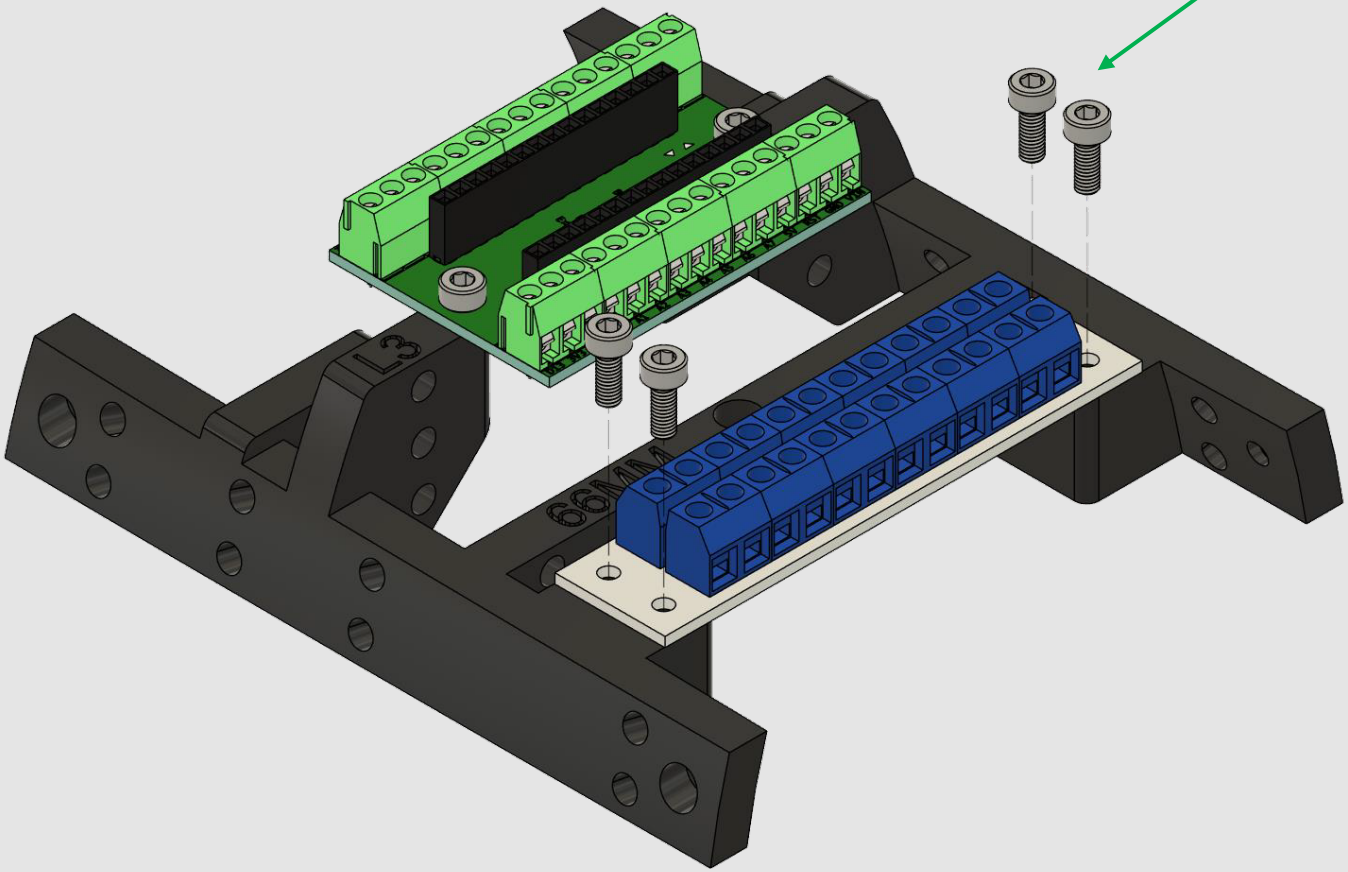



MG996R/SG-5010
Servo
1x



M2x6MM
4x

Servo Wiring Diagram

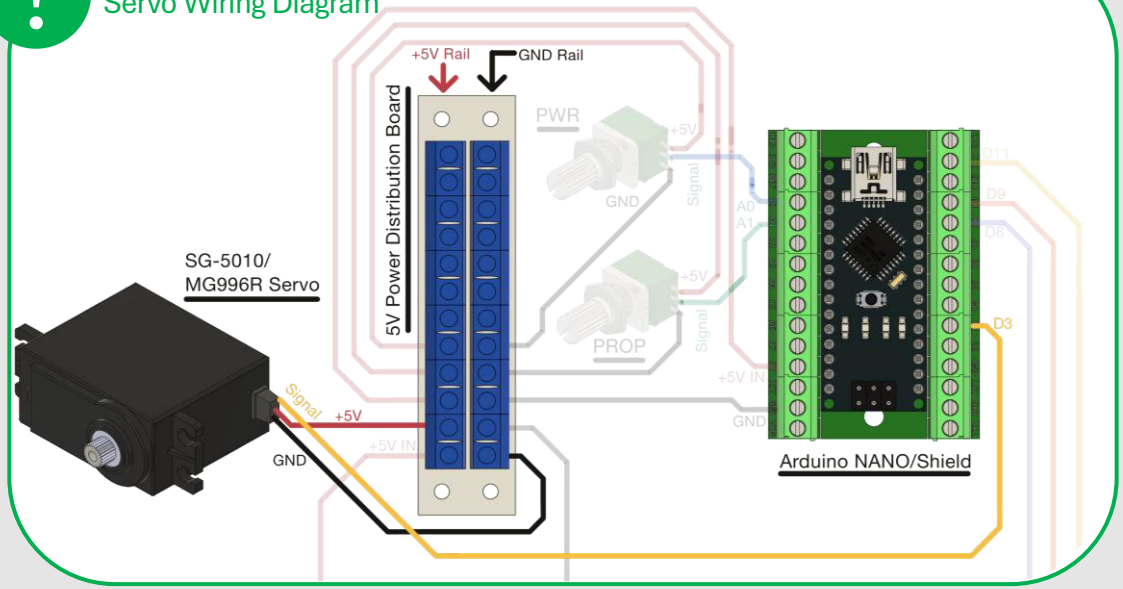

52

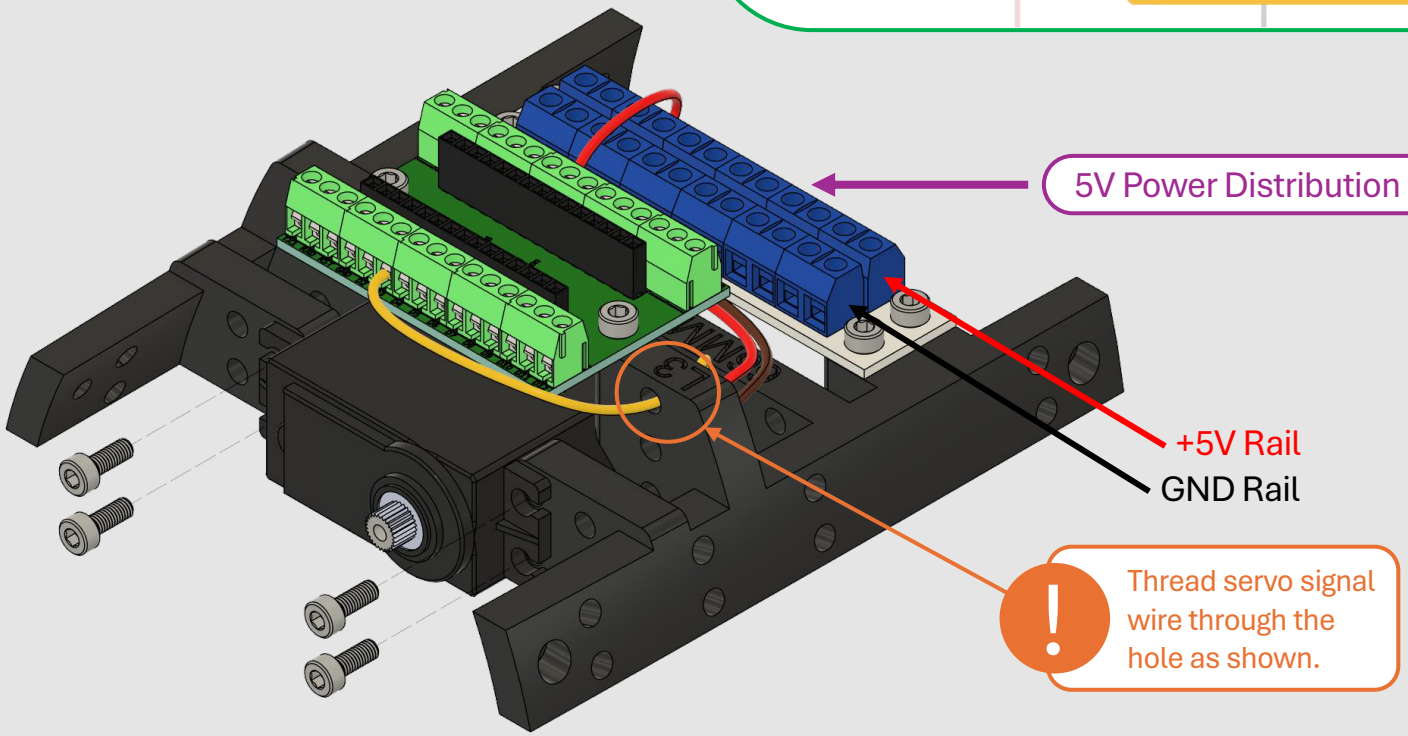

Thread servo signal wire through the hole as shown.



SERVO GEAR
1x



MG996R SERVO ROUND ARM ATTACHMENT
1x



MG996R SERVO ARM ATTACHMENT SCREW
1x



M2x6MM
2x

53

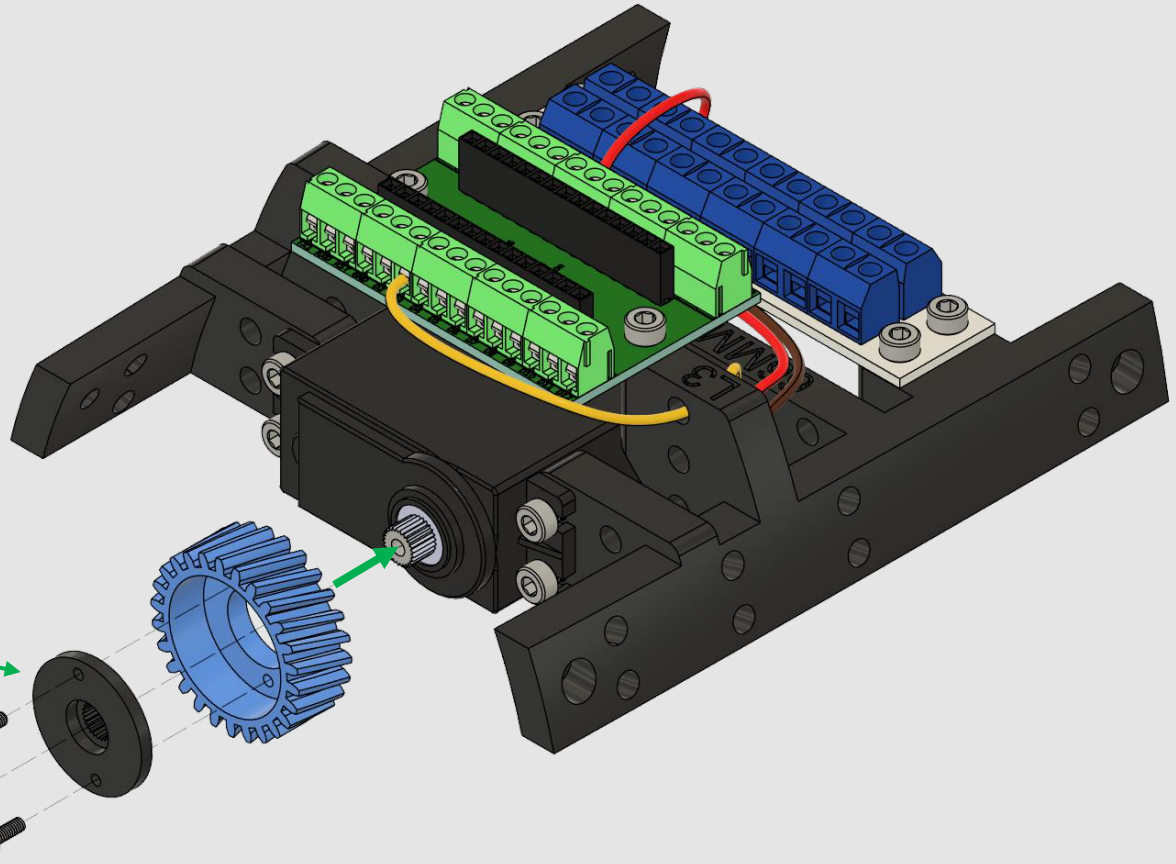

To self tap the M2x6MM screws, requires slightly more force for the round servo attachment.

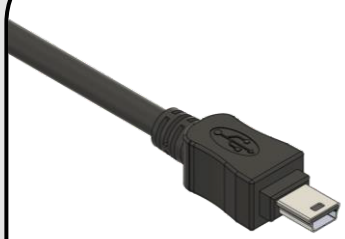

MINI USB CABLE
1x

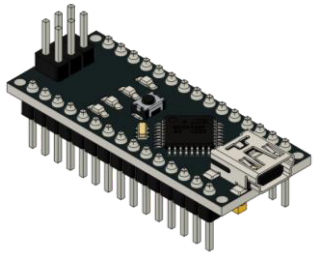

ARDUINO/ELEGOO NANO
1x

54

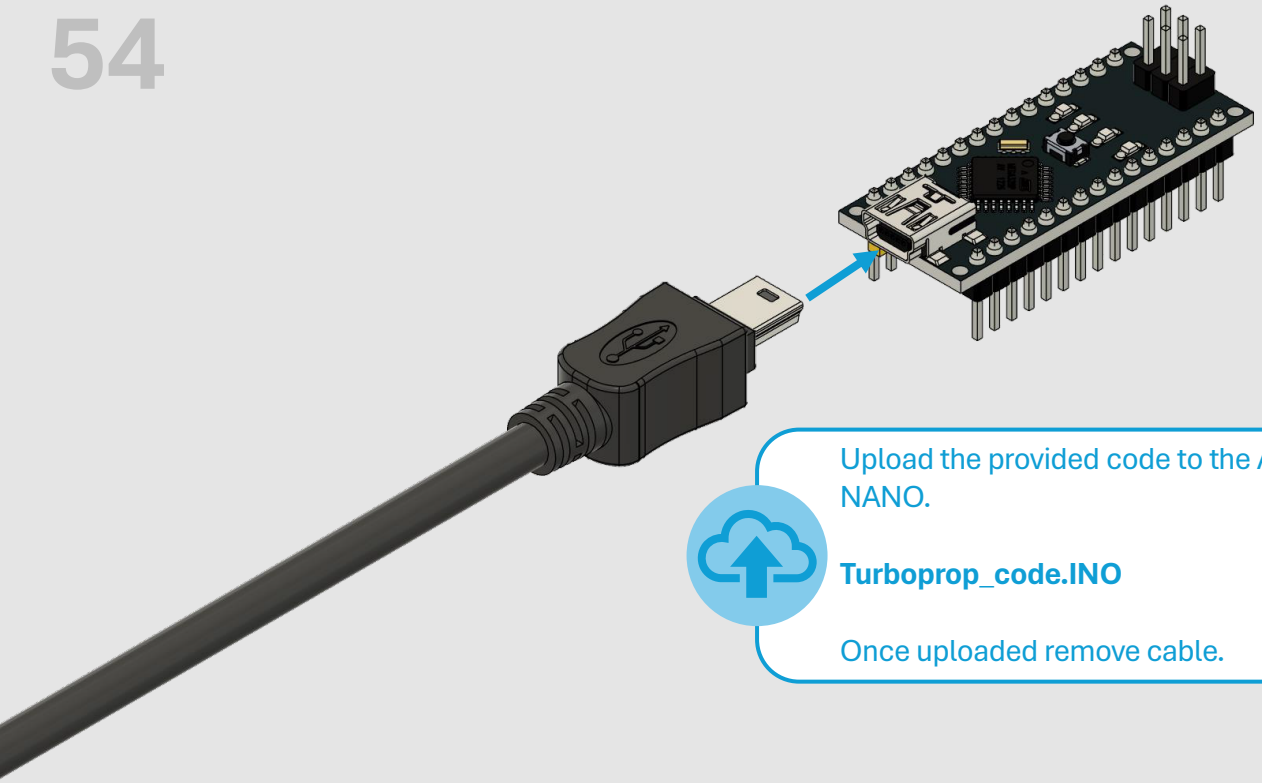

Upload the provided code to the Arduino NANO.

Turboprop_code.INO

Once uploaded remove cable.

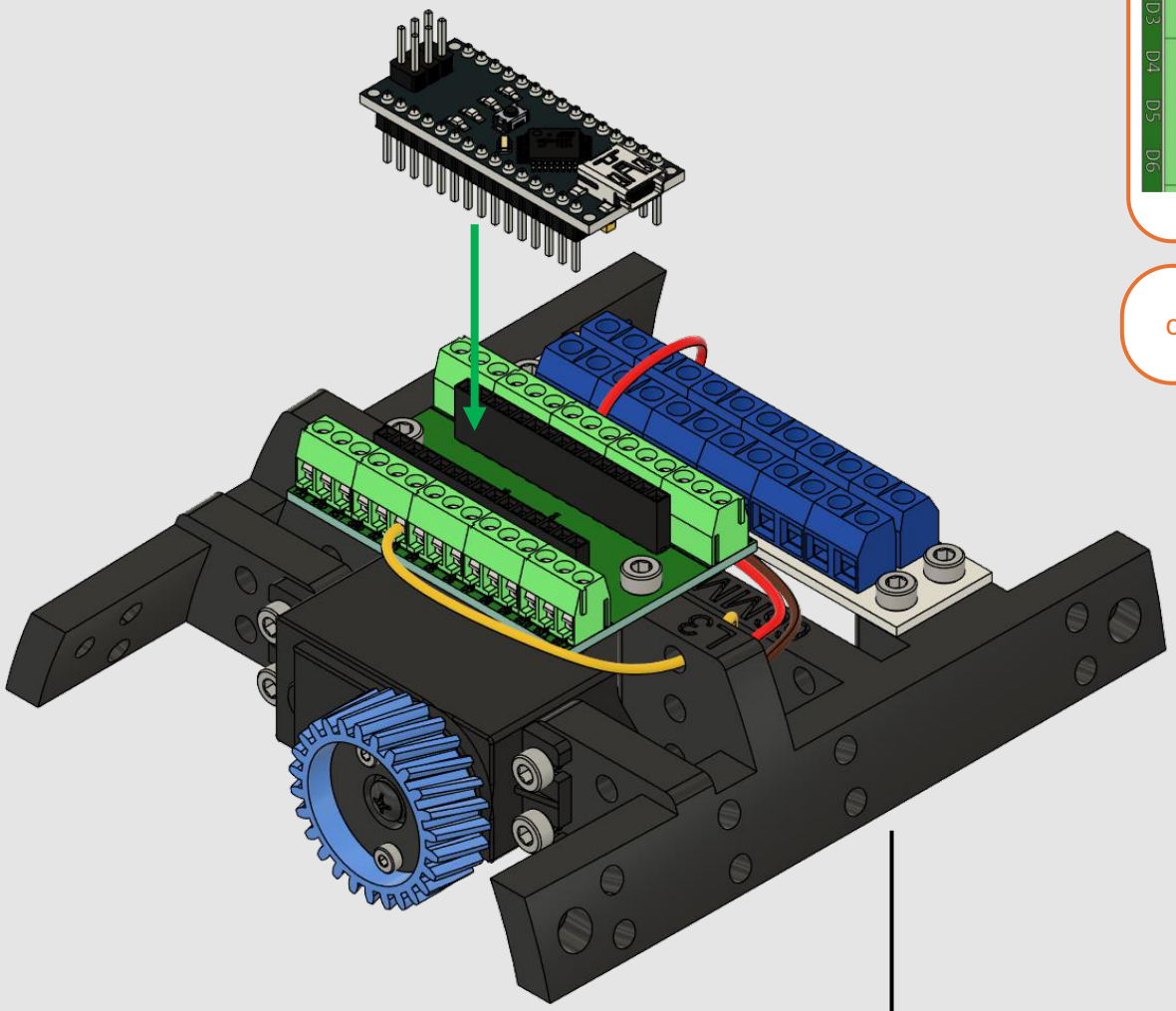

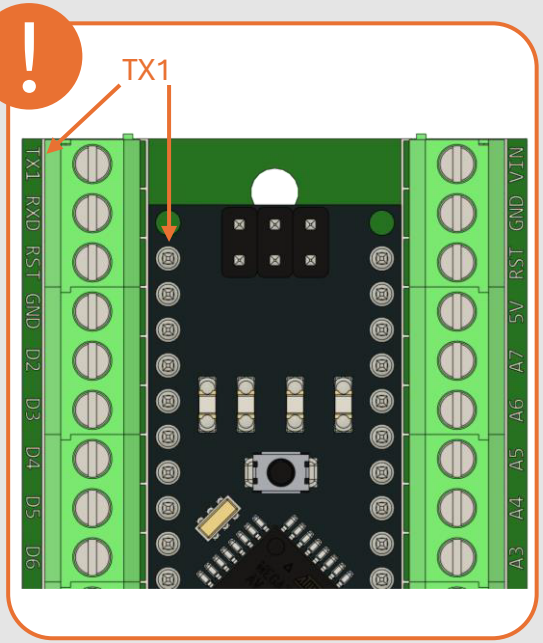

Ensure the Arduino is inserted correctly into the expansion shield. Use pin TX1 for reference.

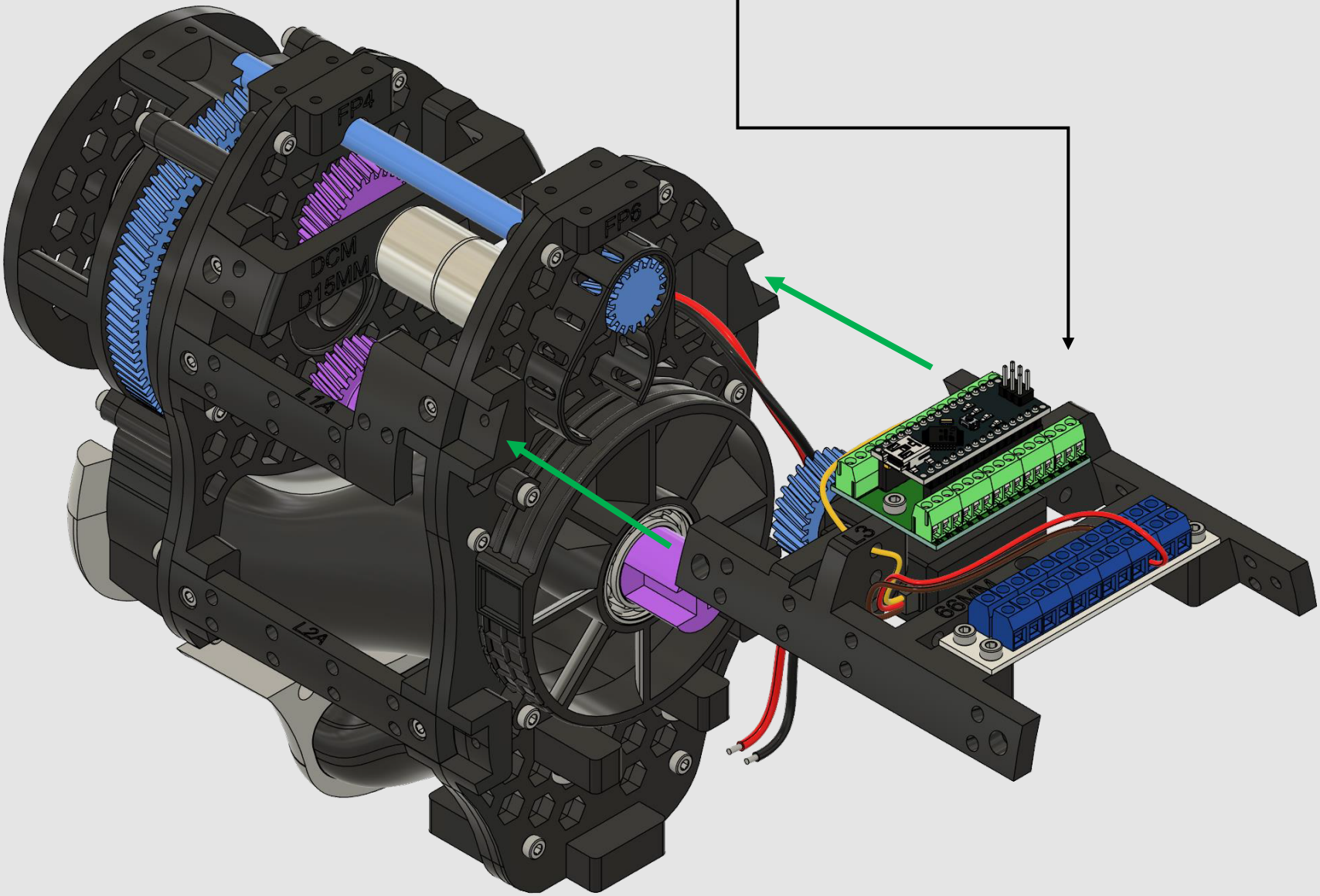
FP4
FP6
DCM
D15MM
L1A
L2A
L3
66MM

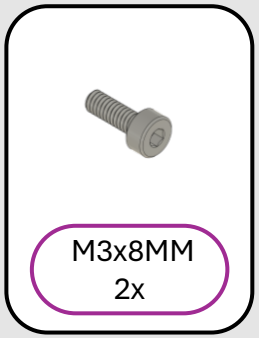

M3x8MM
2x

57

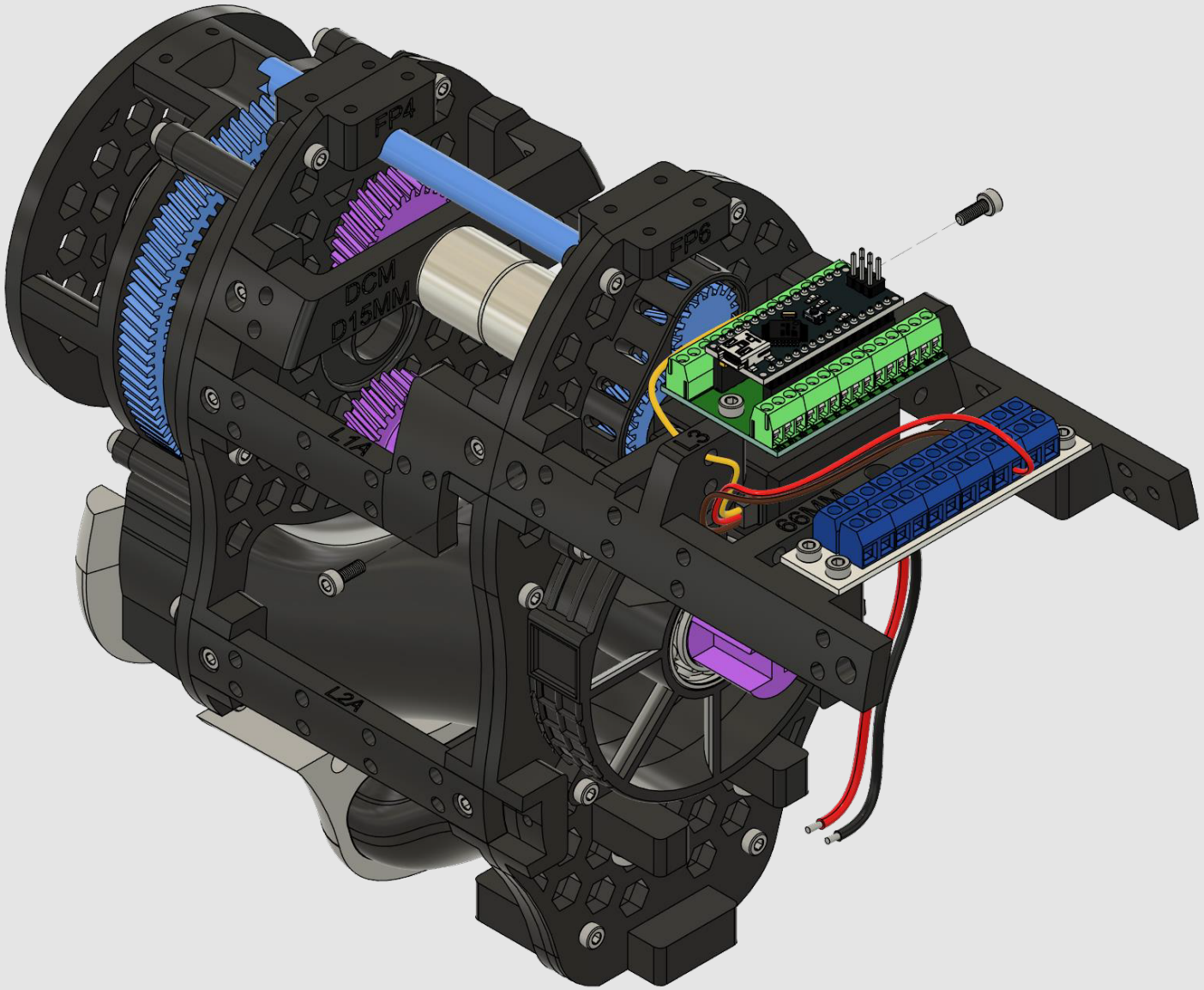

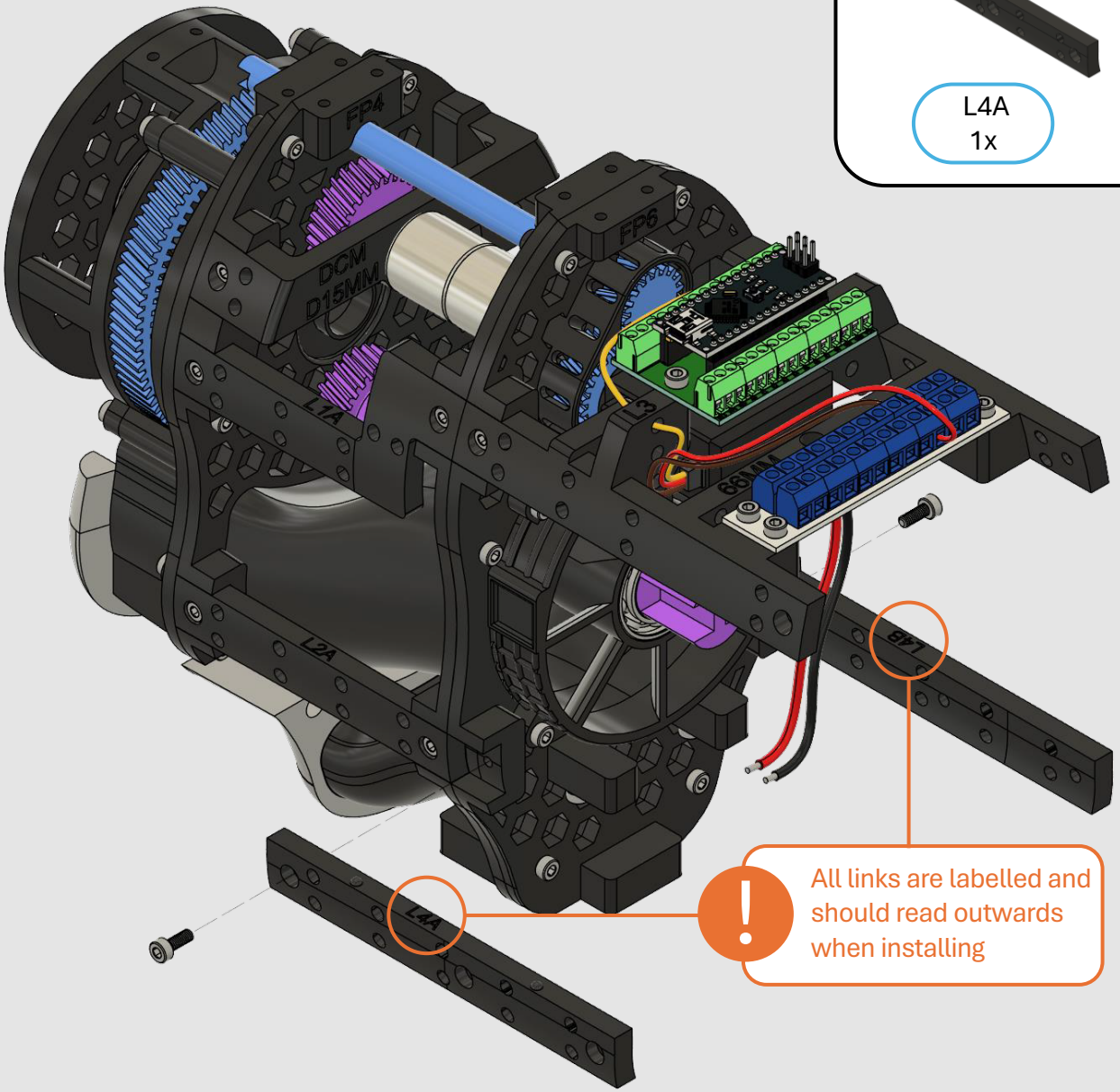



L4A
1x

L4B
1x

M3x8MM
2x

58

All links are labelled and should read outwards when installing

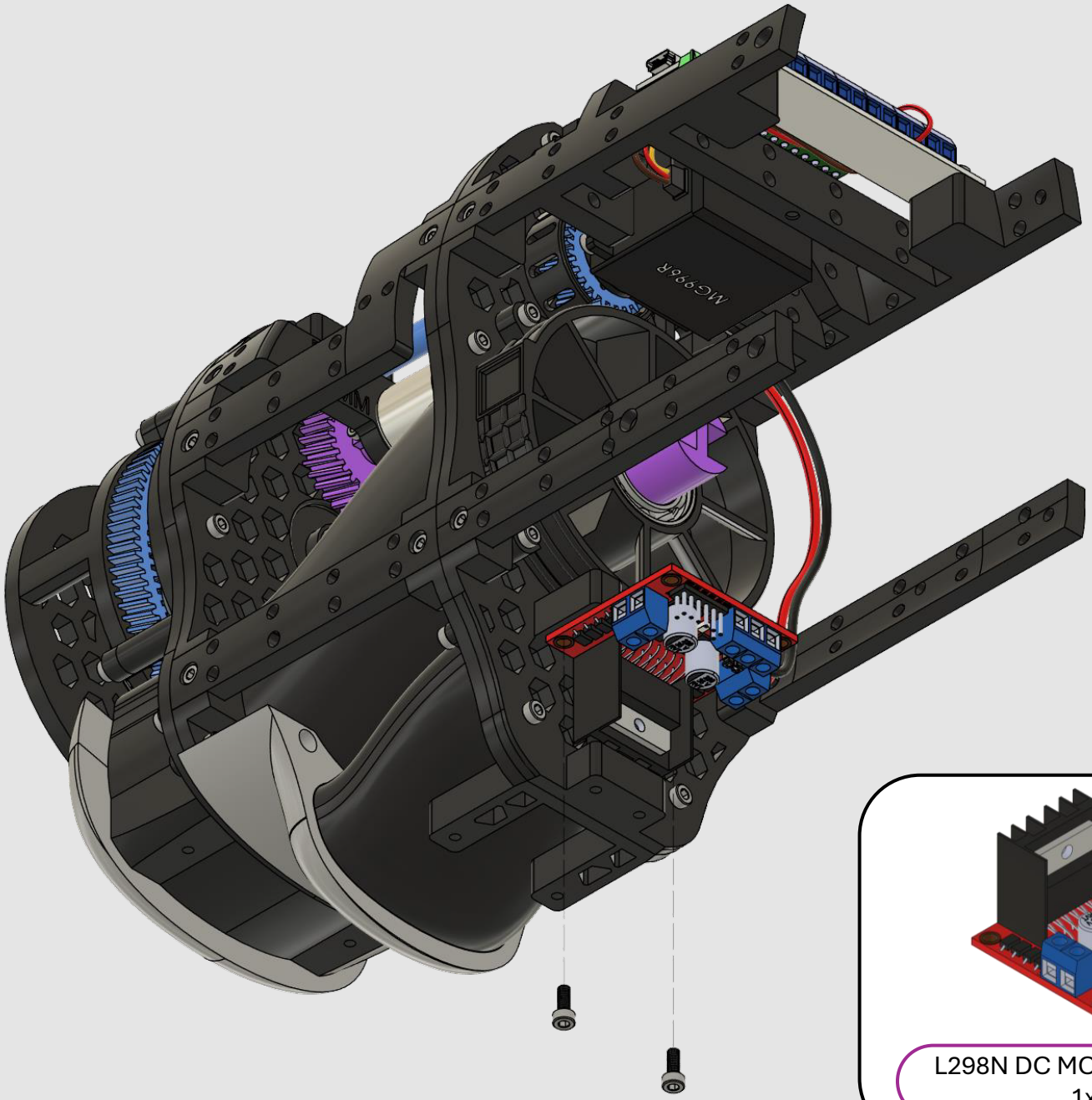

59

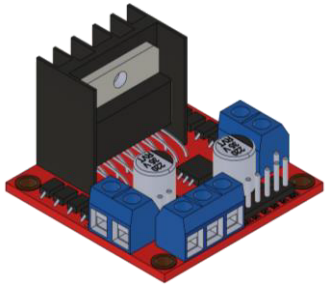

L298N DC MOTOR DRIVER
1x



M3x8MM
2x

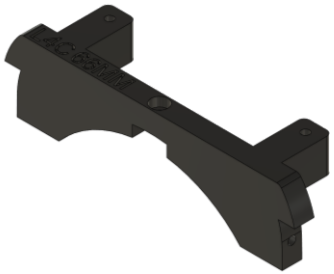

L4C 66MM
1x



M3x8MM
2x

60

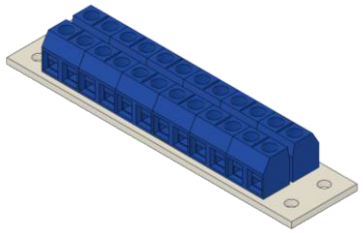

TERMINAL POWER DISTRIBUTION BOARD 1x



M3x8MM 2x

61

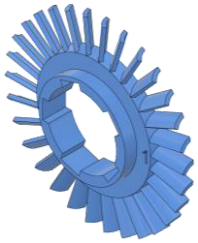

HPC – 1, 2, 3, 4, 5, 6, 7, 8, 9 & 10
1 ea.



HPCS – 1, 2, 3, 4, 5, 6, 7, 8, 9, 10 & 11
1 ea.



POWER SHAFT B
1x

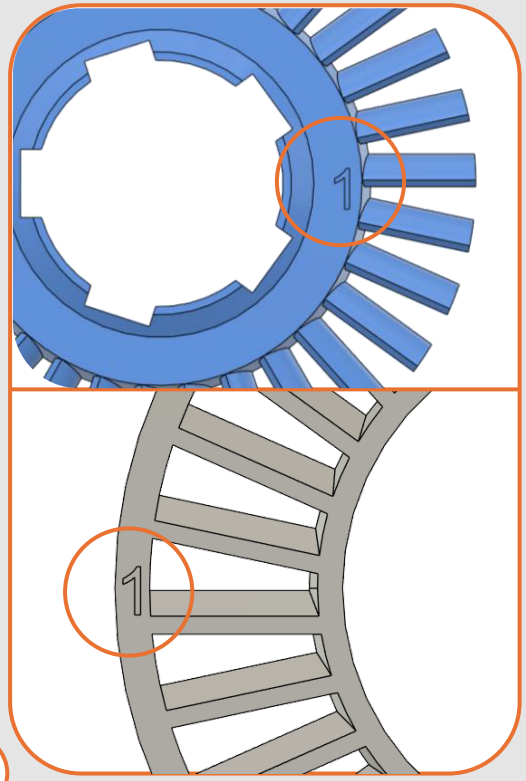

62

Each “HPC” and “HPCS” are numbered to ensure the order of assembly is correct. **Start from 10.** **HPCS-11** Can be placed last.

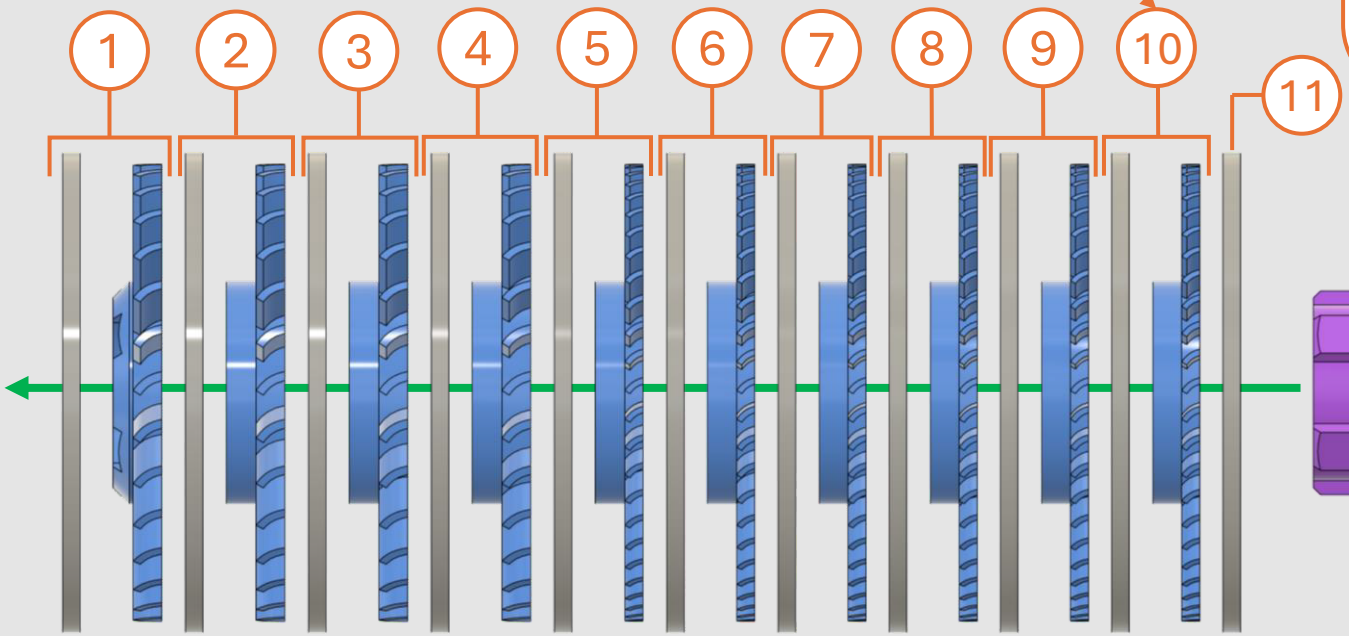





COMPRESSOR CASING
1x

63

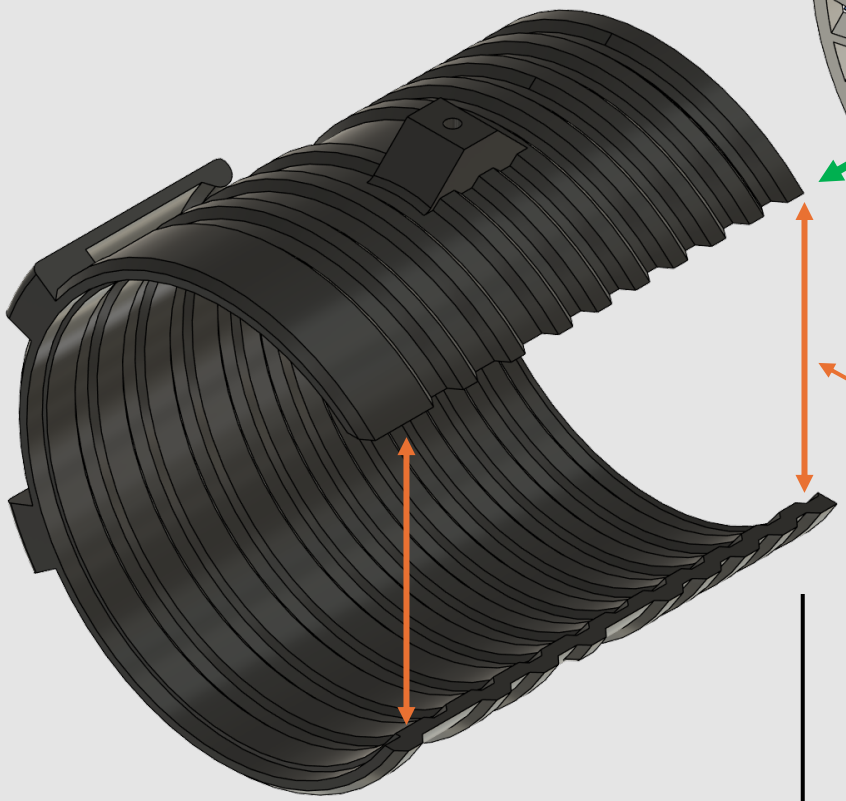

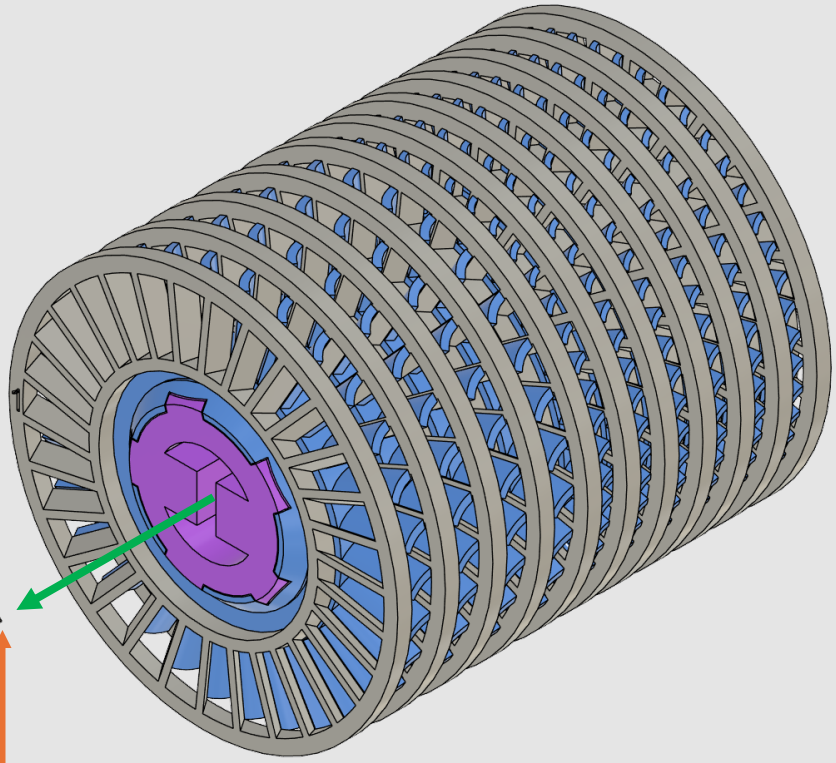

To insert the compressor assembly, slightly flex “COMPRESSOR CASING” and use the slots to align each “HPCS”


Align the slots

Ensure to align “POWER SHAFT A” with “POWER SHAFT B” when inserting:

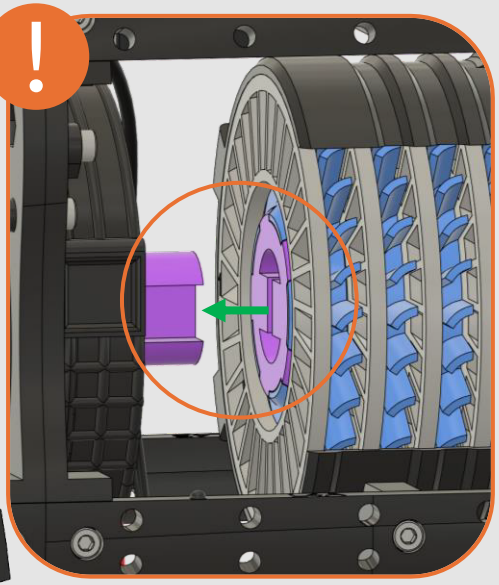

The mounting holes should align with “L3 66MM” and “L4C 66MM”.

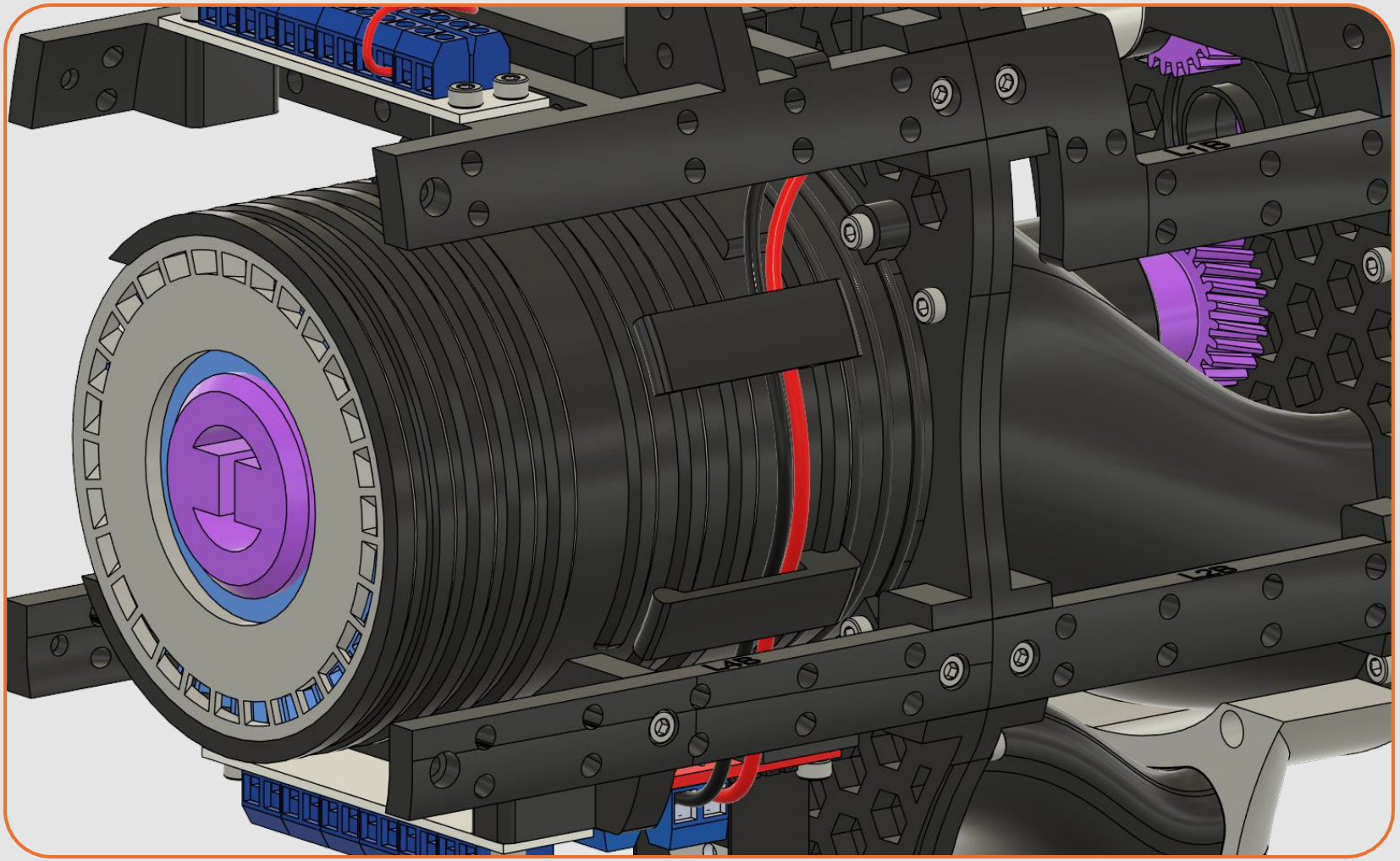

Use the two clips on “COMPRESSOR CASING” to neatly secure the DC Motor wiring.
We will wire this to the L298N DC Motor Driver in the next few steps.

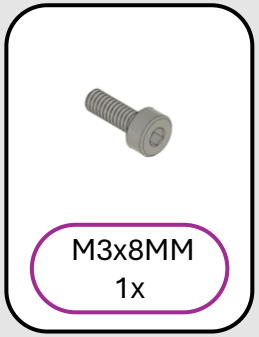

67

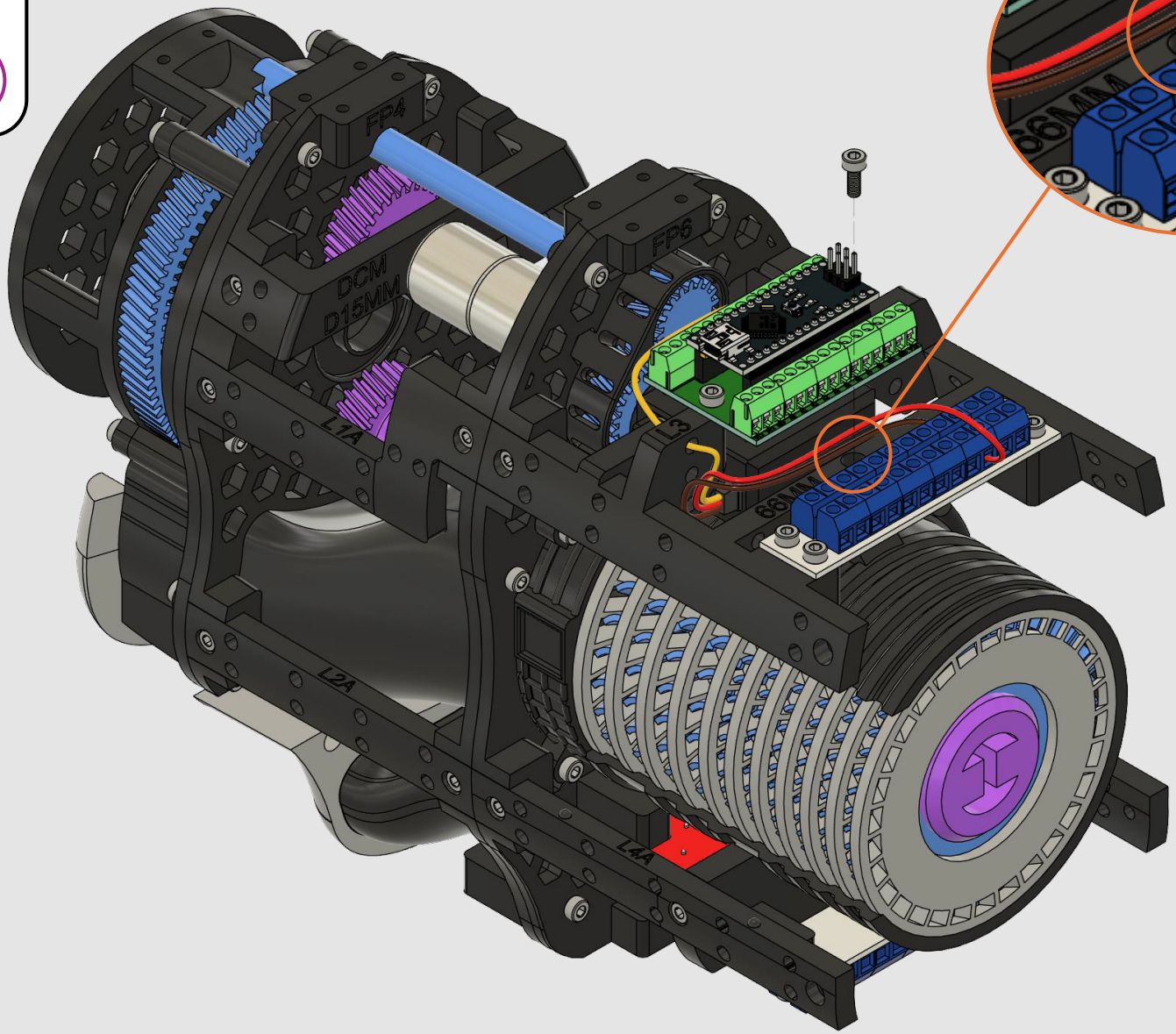



M3x8MM
1x

68

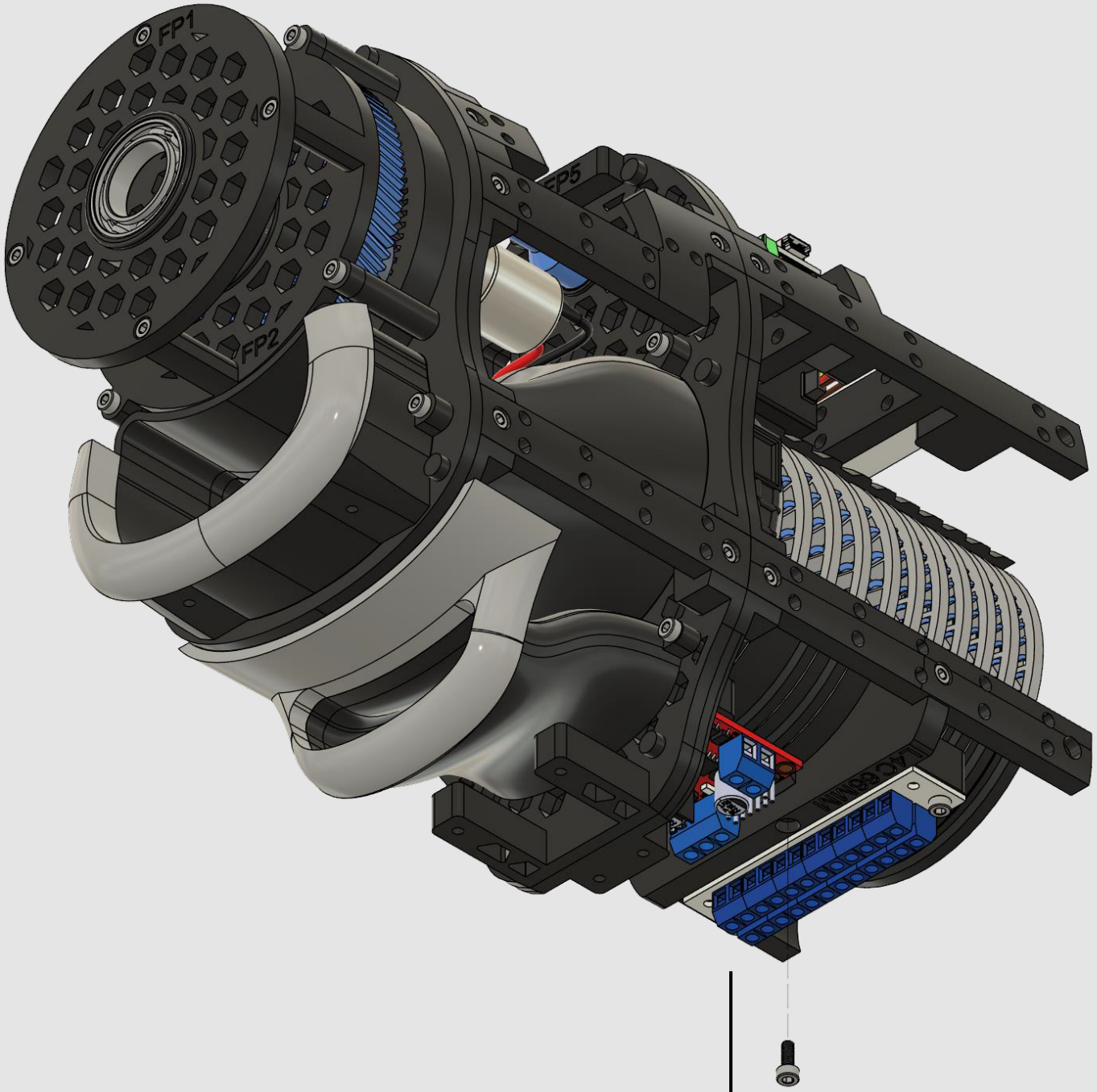

Attach both DC Motor wires to the L298N DC Motor Driver on terminals “Motor A”.

After power up, we can confirm correct polarisation and swap connection if needed.

Ensure the Jumper (included with L298N) is attached to enable +5V.

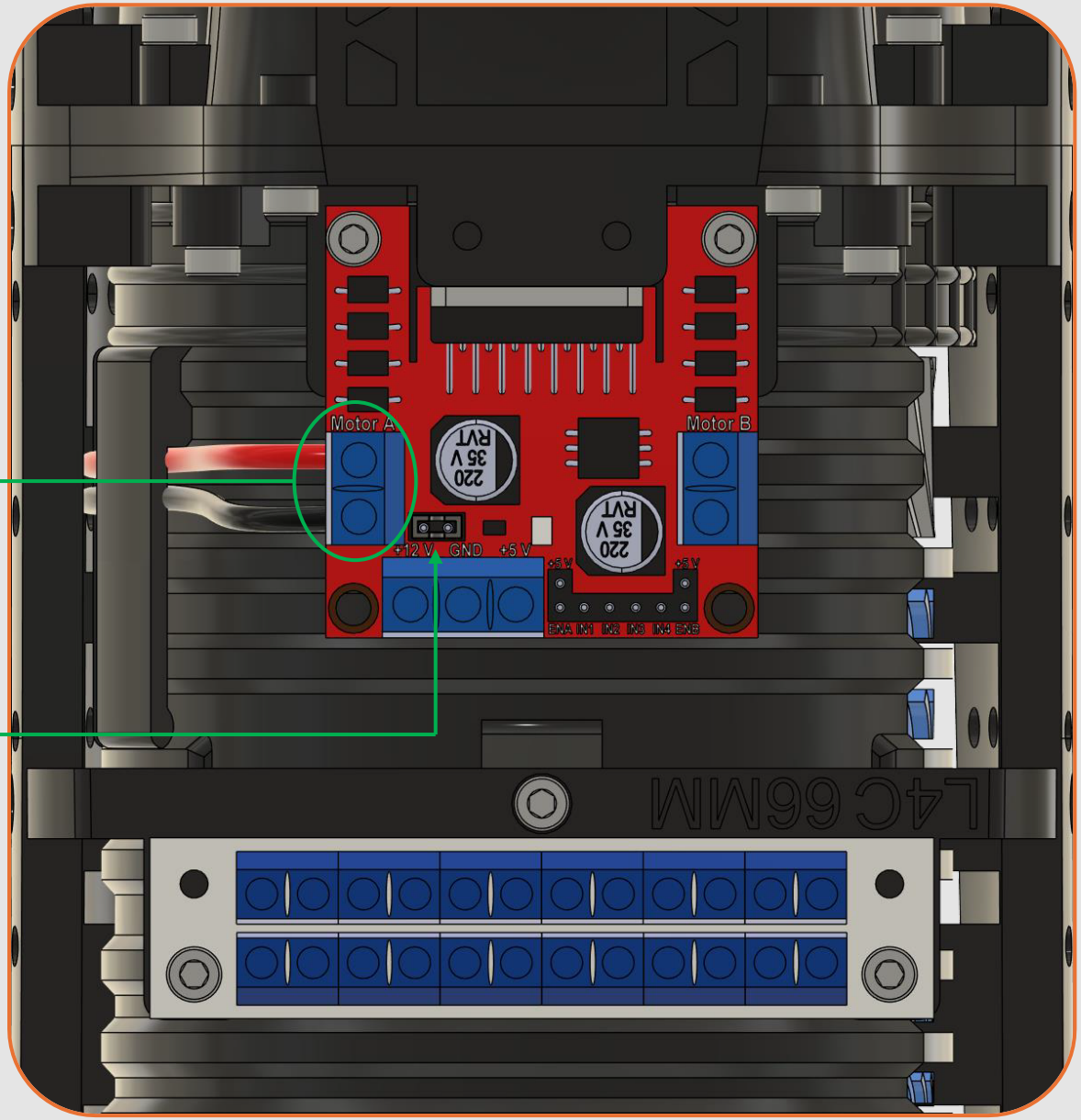

Complete the following wiring connections between the Arduino NANO, L298N DC Motor Driver and Power Distribution Boards.

The wiring colours shown in CAD may not correlate to the colours shown in the wiring diagram.

5V Power Distribution Board

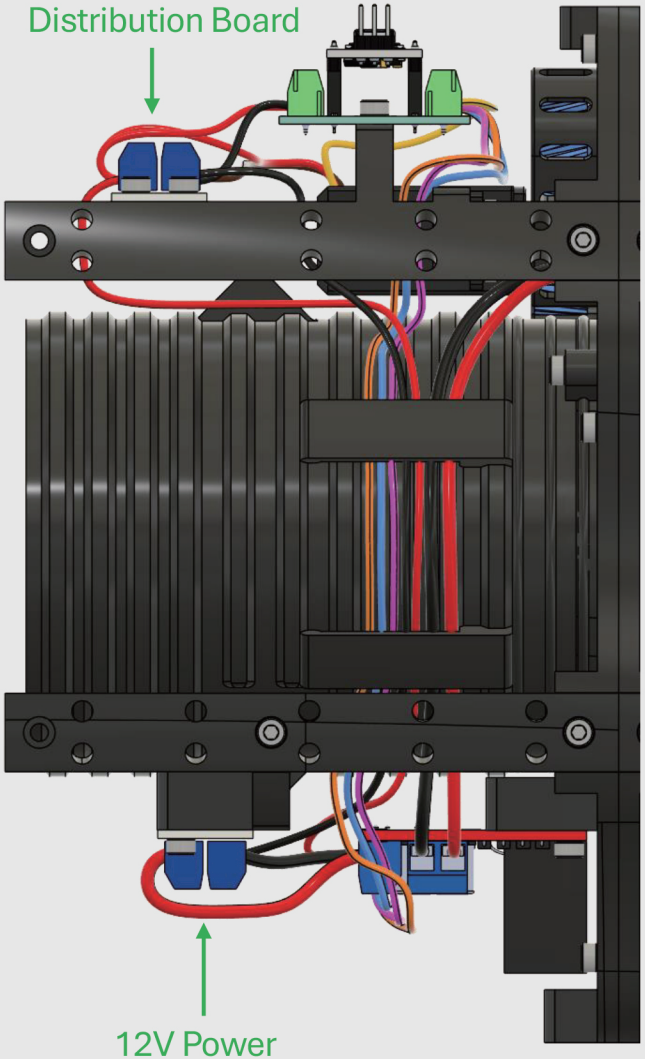

12V Power Distribution Board

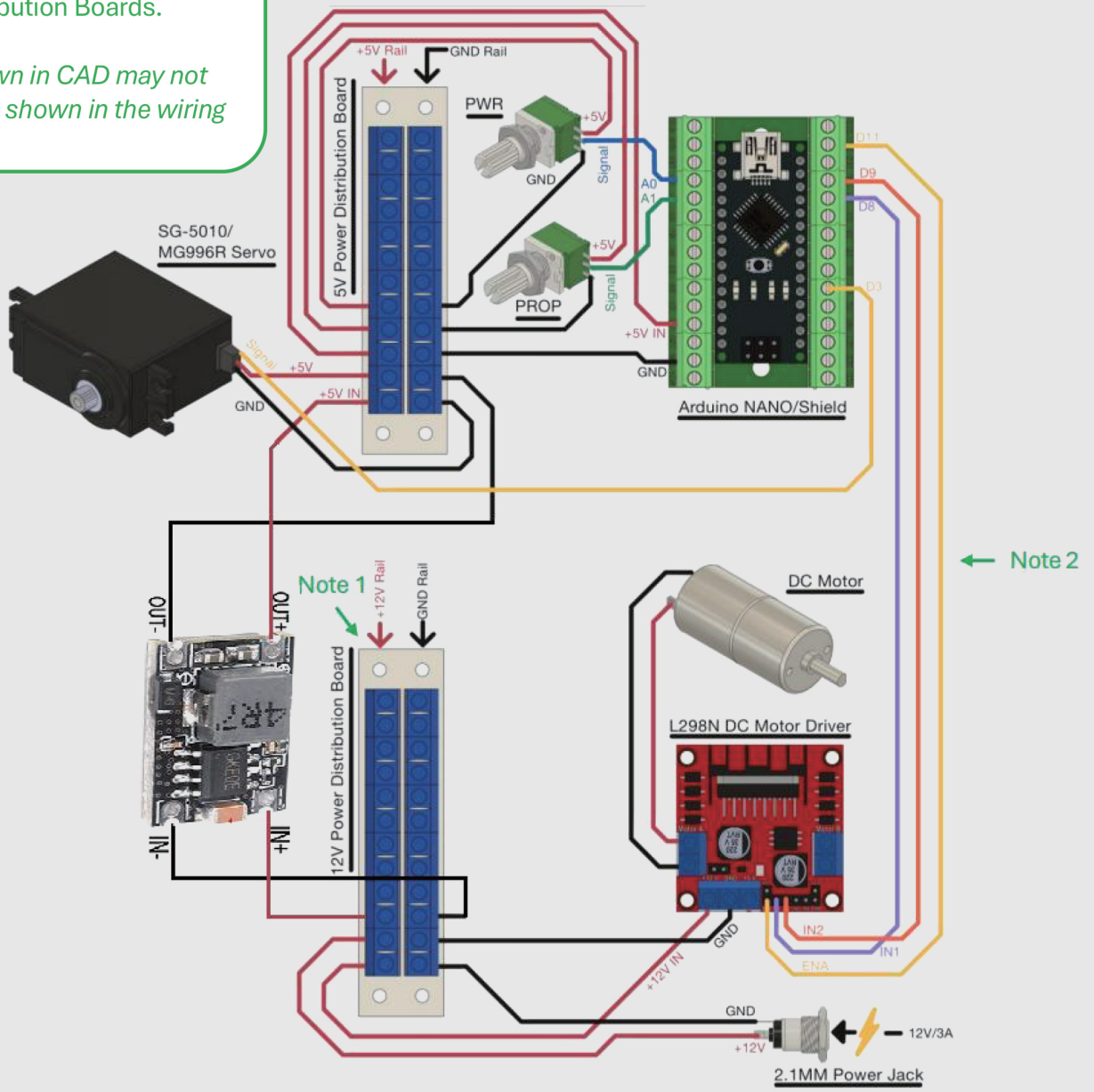

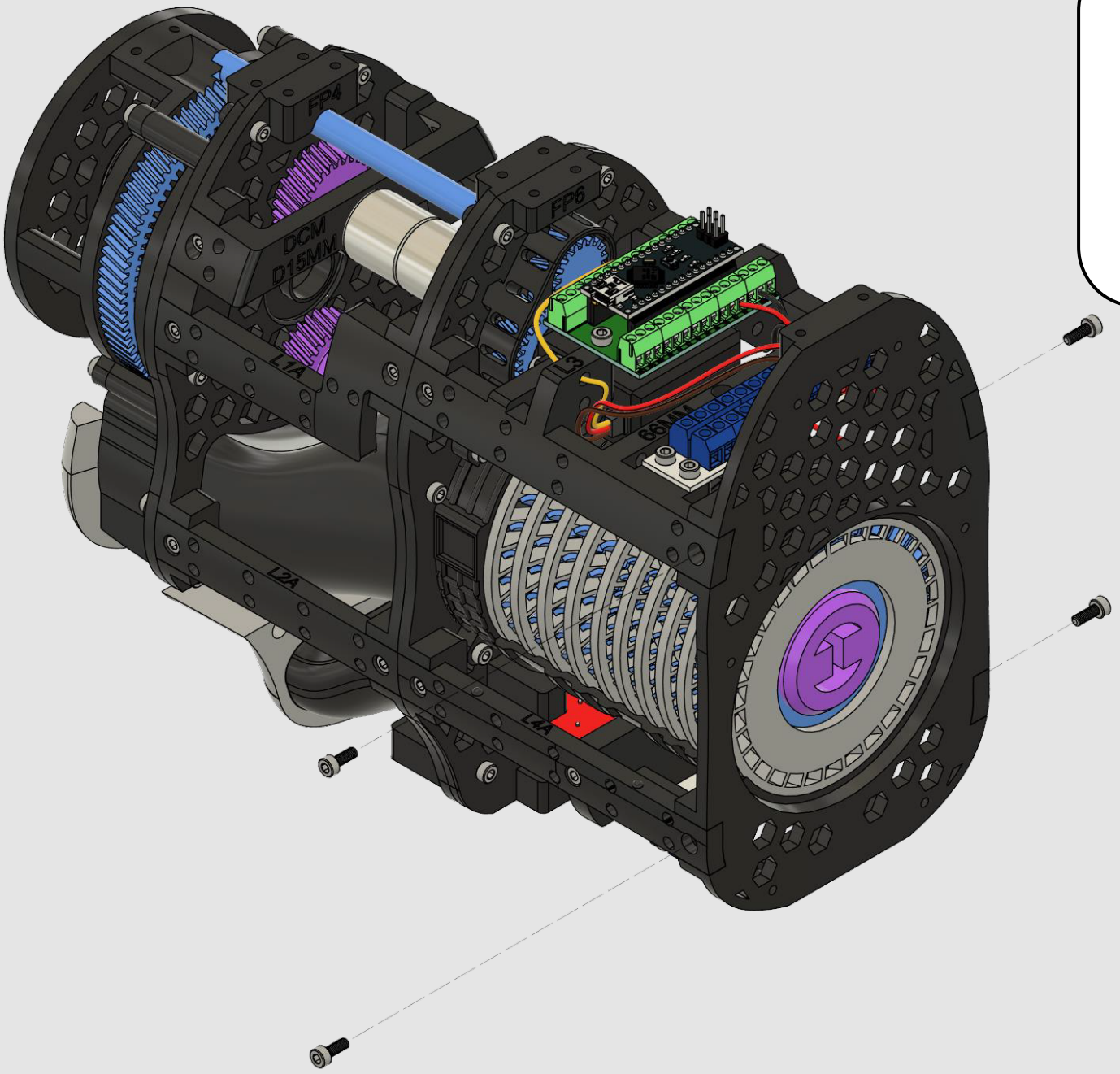



FP7
1x



M3x8MM
4x

71

Frame Subassembly C Completed!

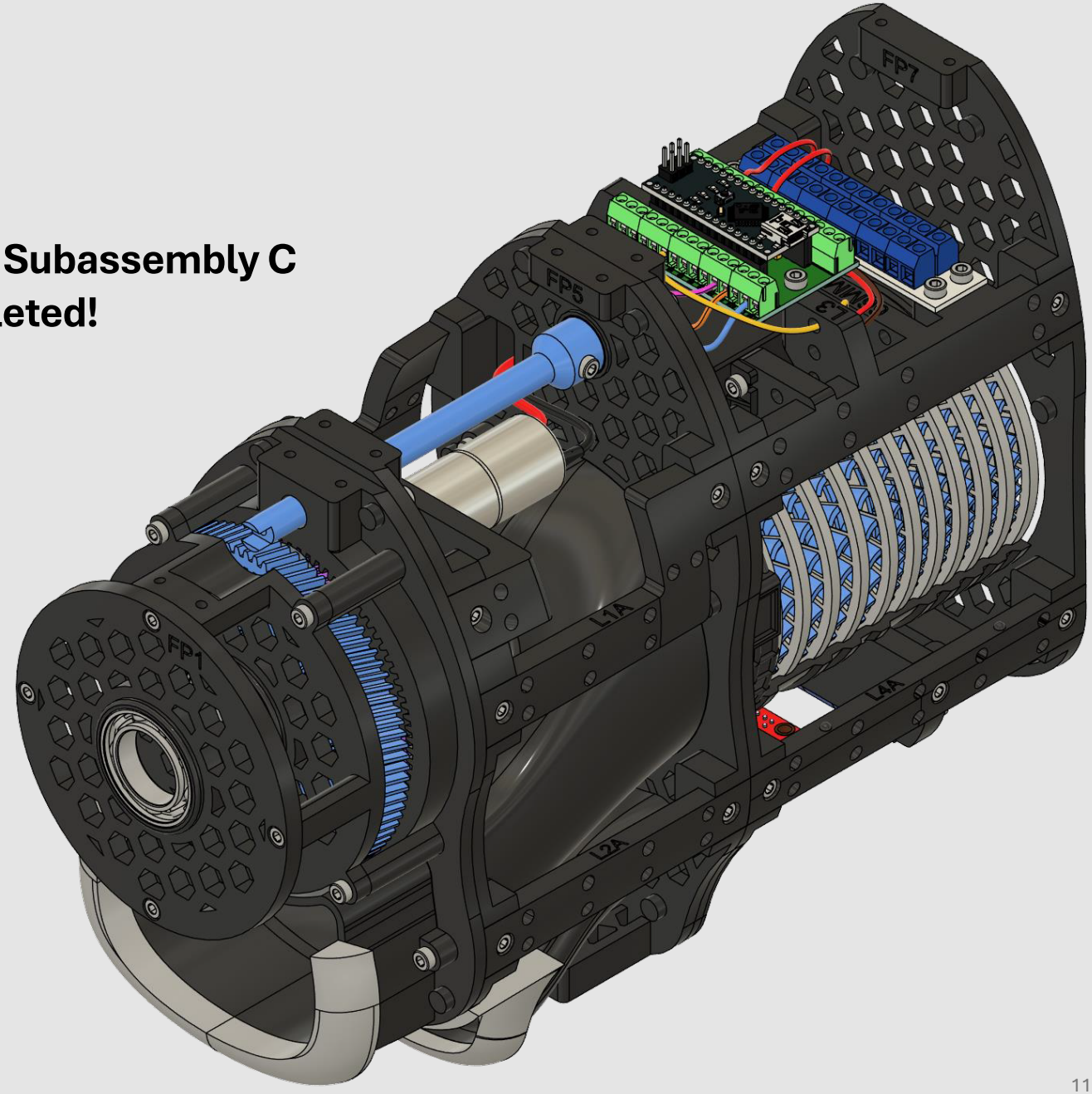

5. Frame Subassembly D



Required 3D Printed Parts:

- ❑ FP8
- ❑ FP9
- ❑ FP10
- ❑ L5A
- ❑ L5B
- ❑ L6A
- ❑ L6B
- ❑ COMBUSTION CHAMBER 6x
- ❑ HPT – 9
- ❑ HPT – 10
- ❑ HPT – 11
- ❑ HPTS – 9
- ❑ HPTS – 10
- ❑ HPTS – 11
- ❑ COMBUSTION CLIP A
- ❑ COMBUSTION CLIP B
- ❑ COMBUSTION A
- ❑ COMBUSTION B
- ❑ EXHAUST
- ❑ POWER SHAFT C
- ❑ POWER SHAFT D
- ❑ POWER SHAFT CAP
- ❑ COMBUSTION CASING

Required Non-Printed Parts:

- ❑ M3x8MM Hex Socket Screws 27x
- ❑ 20MM Ball Bearings 2x

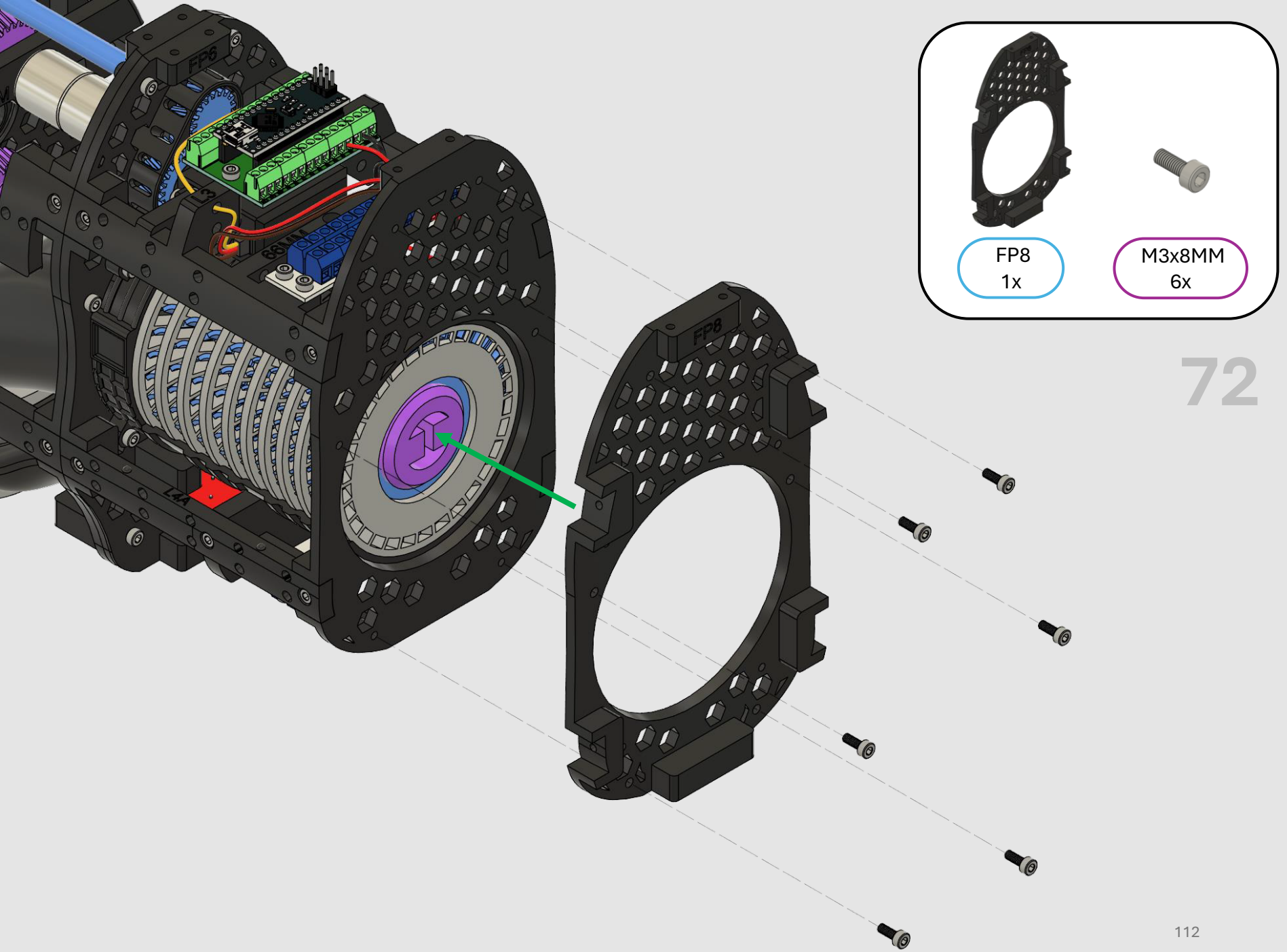
FP8
1x
M3x8MM
6x
72

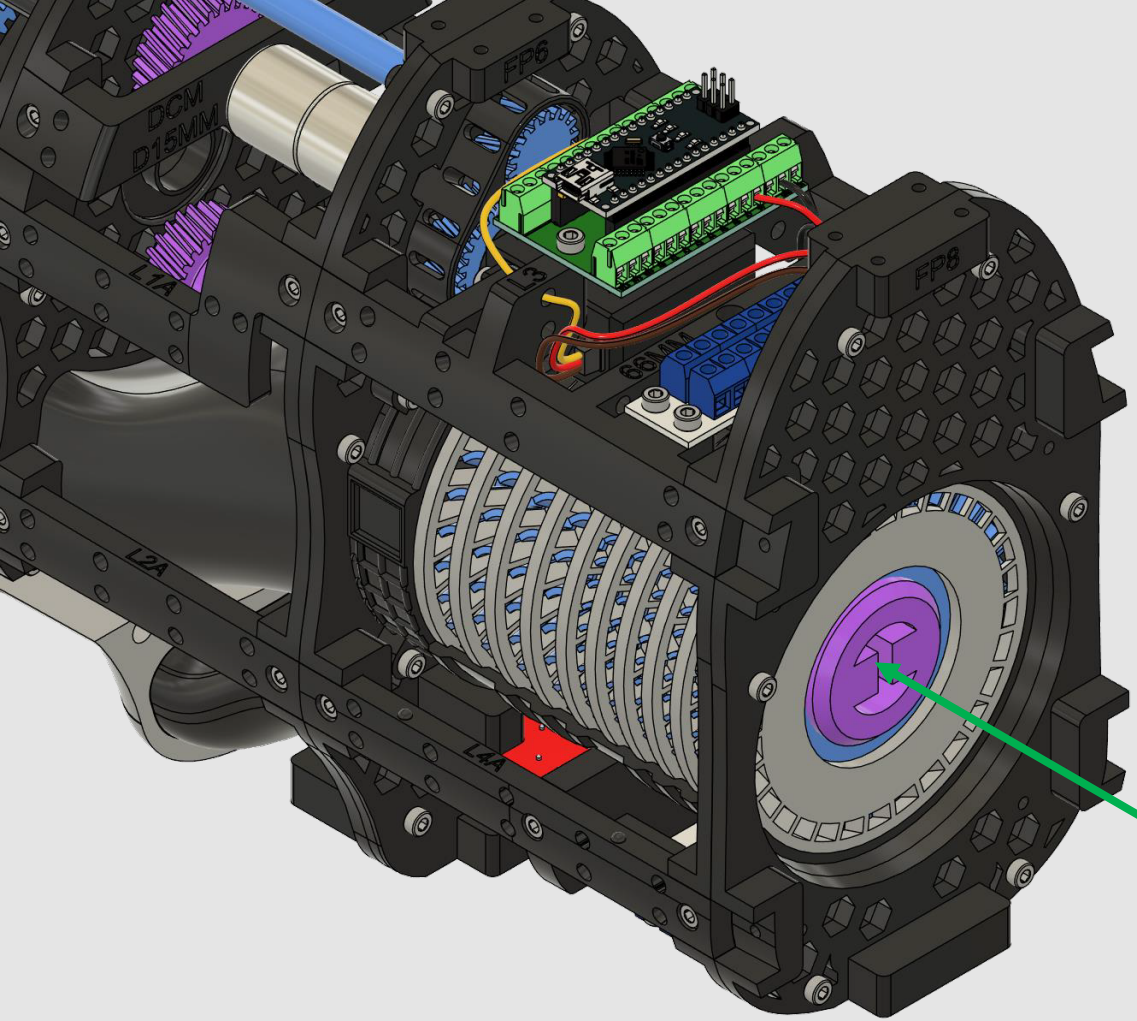



POWER SHAFT C
1x

73



Ensure hole is facing this way as shown:



COMBUSTION A
1x



20MM Bearing
1x

74

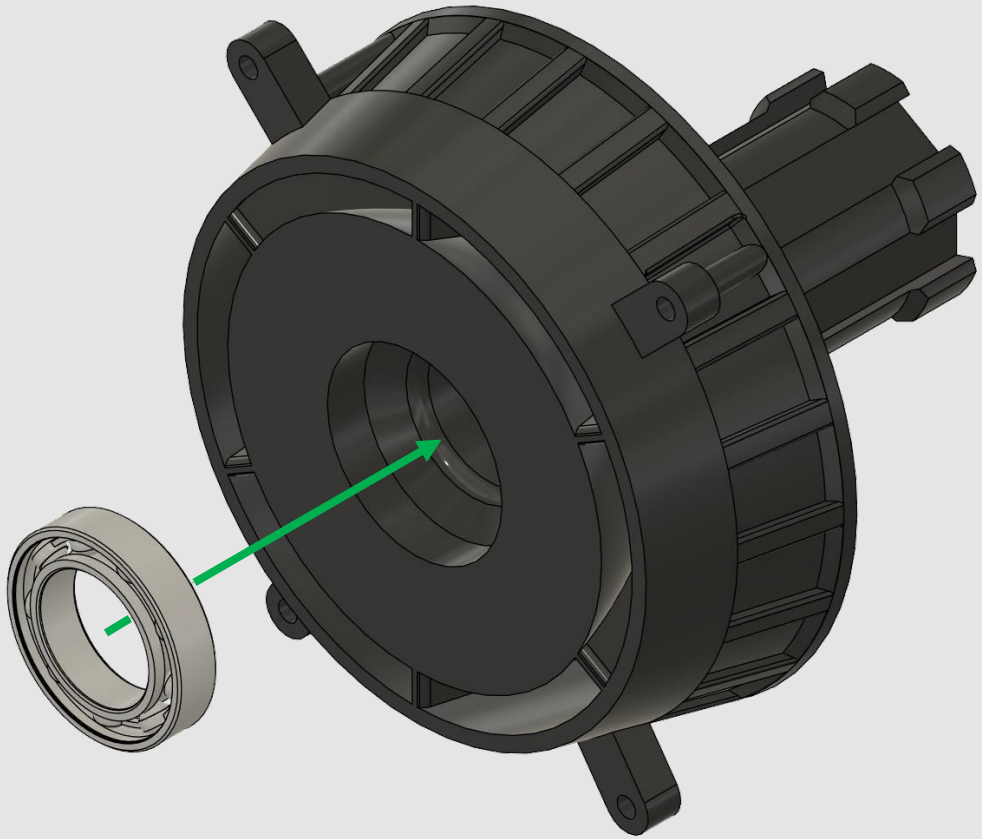



COMBUSTION CLIP A
1x



COMBUSTION CLIP B
1x

75

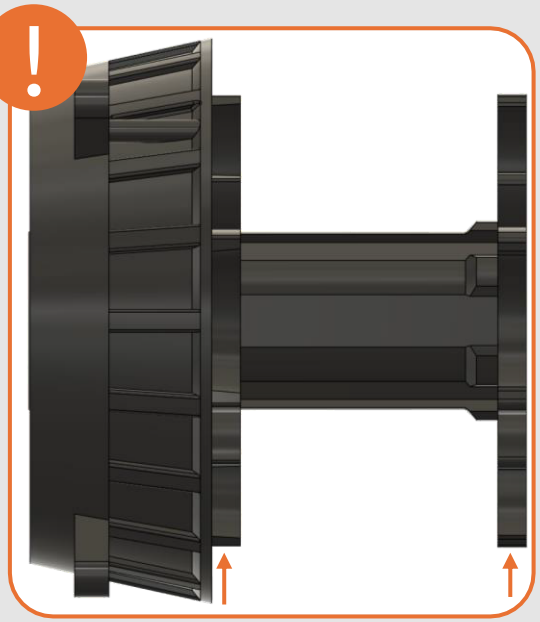

Ensure to align and orientate
“COMBUSTION CLIP A” &
“COMBUSTION CLIP B” as shown:

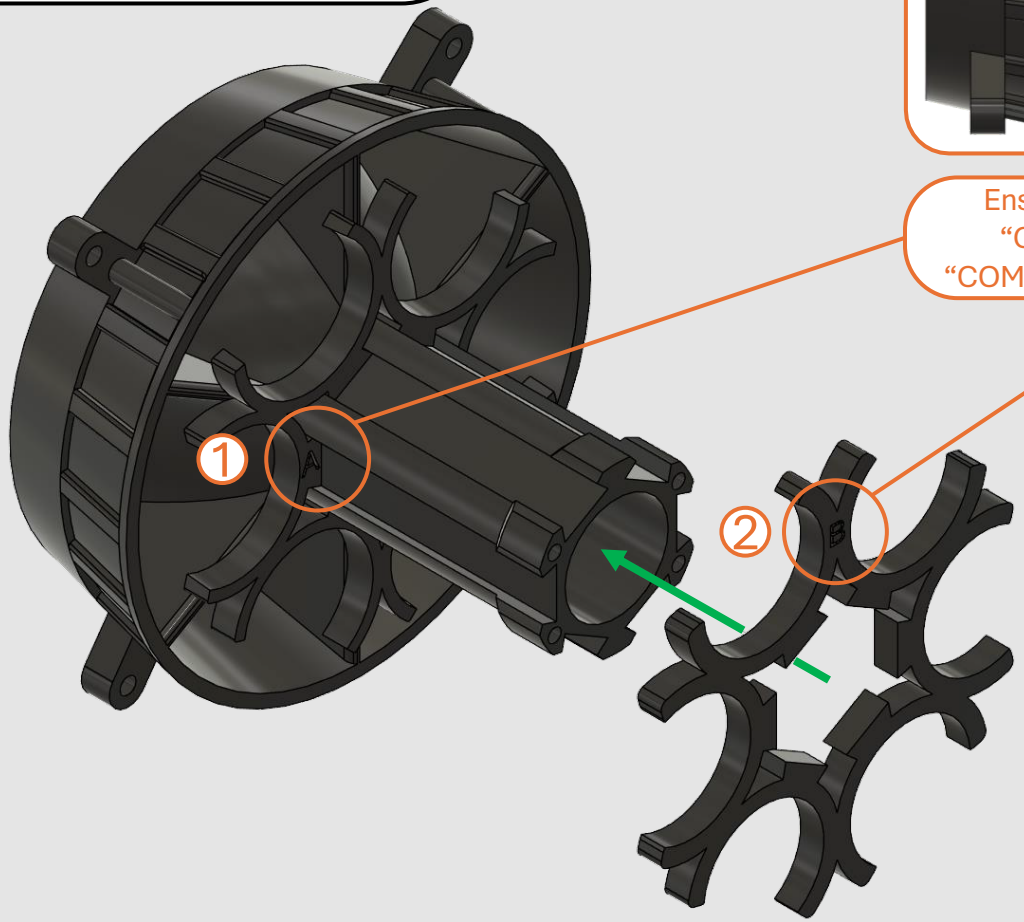

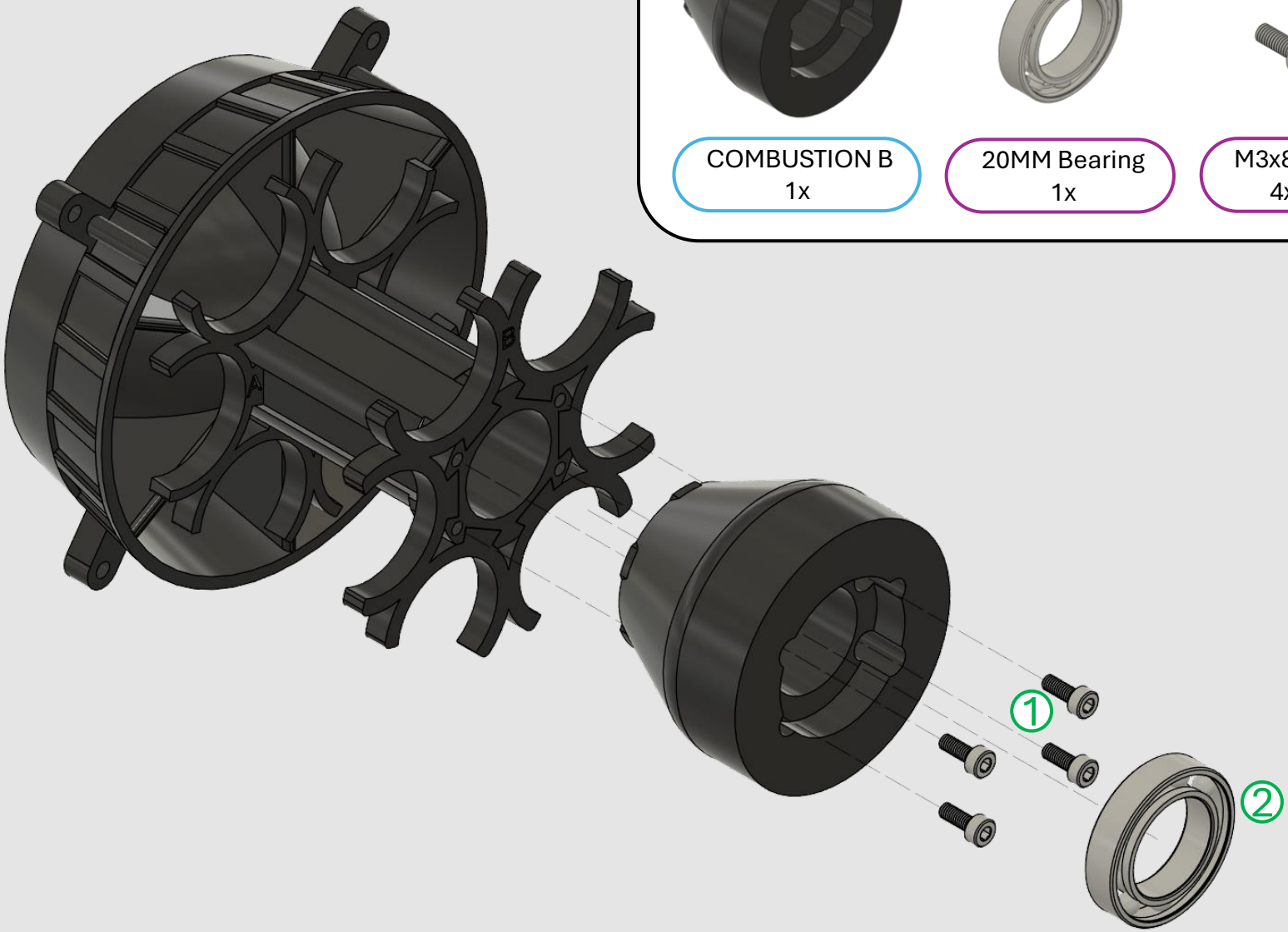
COMBUSTION B
1x
20MM Bearing
1x
M3x8MM
4x
76
1
2



COMBUSTION CHAMBER
6x

77

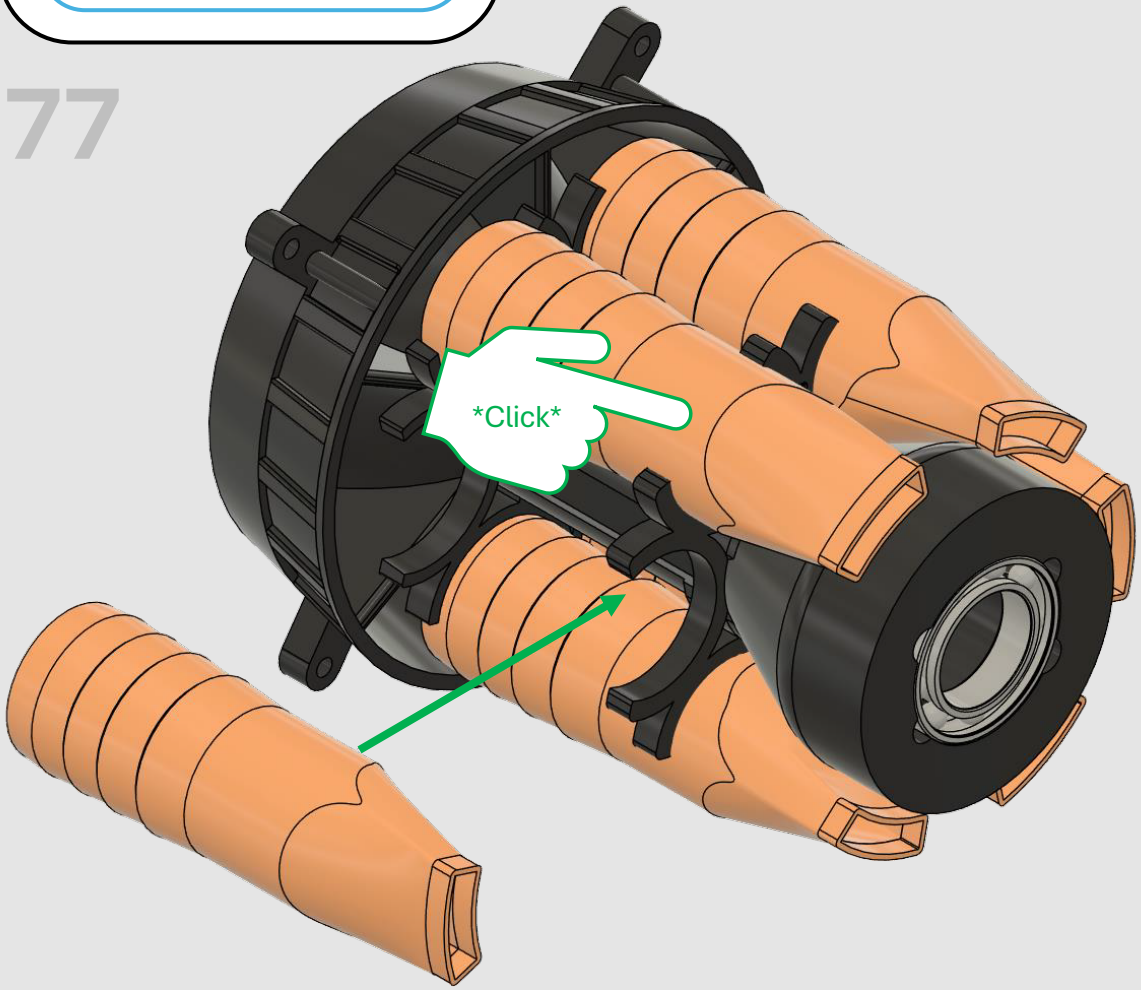

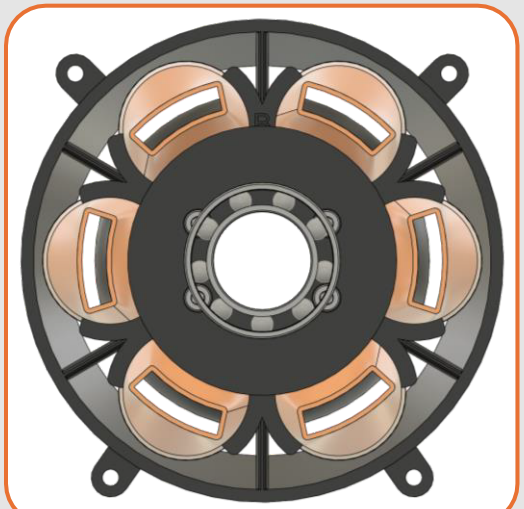

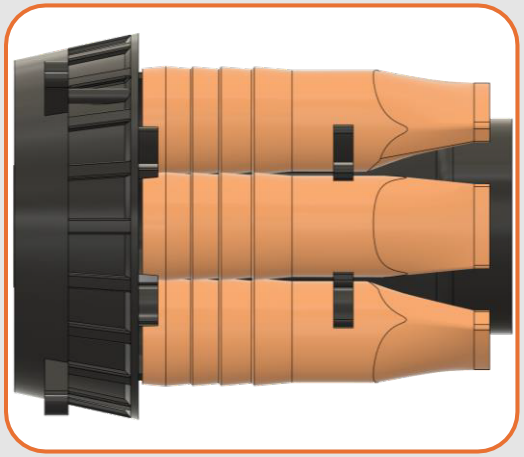

Align each “COMBUSTION CHAMBER” as shown above

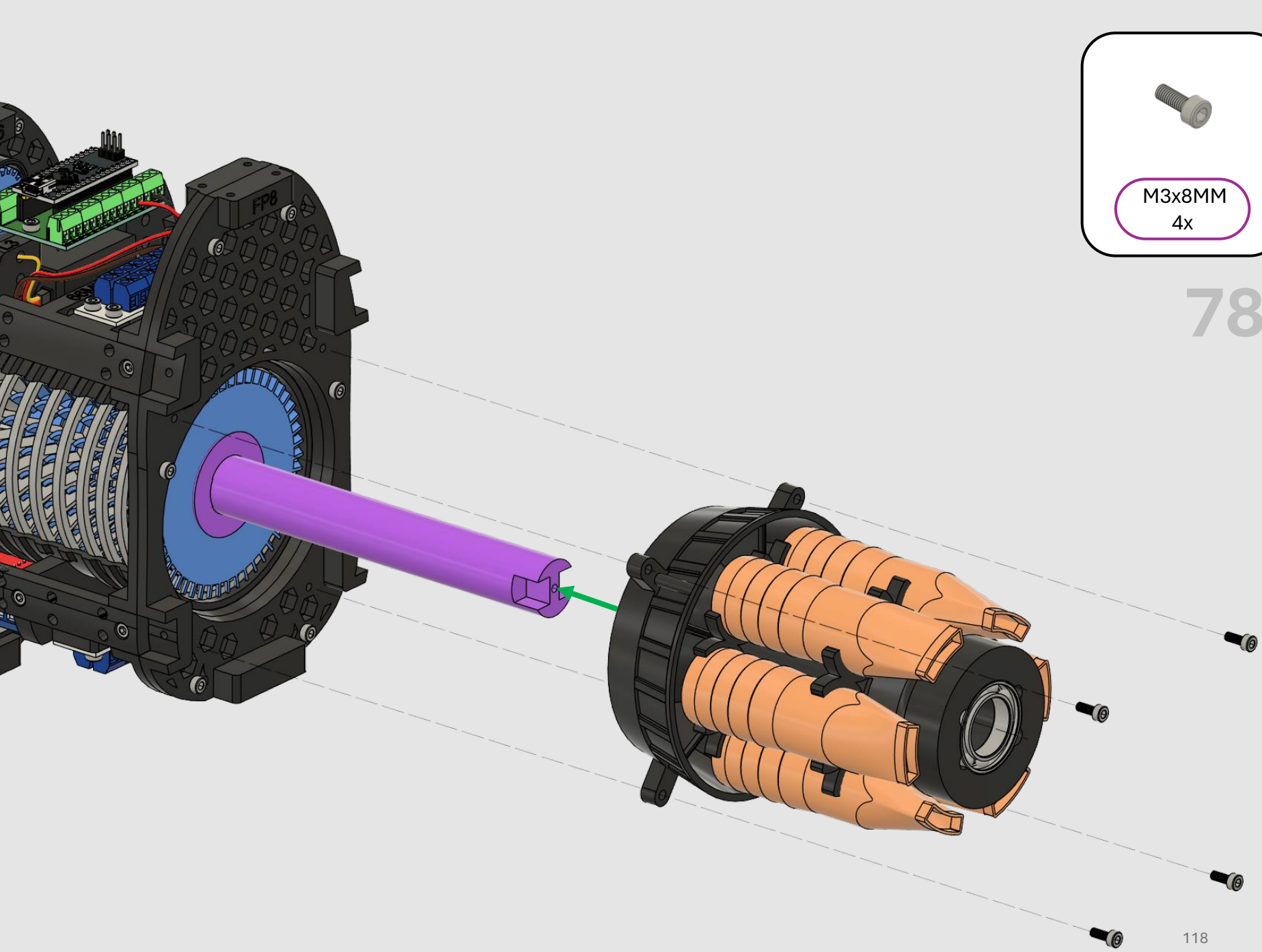
M3x8MM
4x
78
FP8

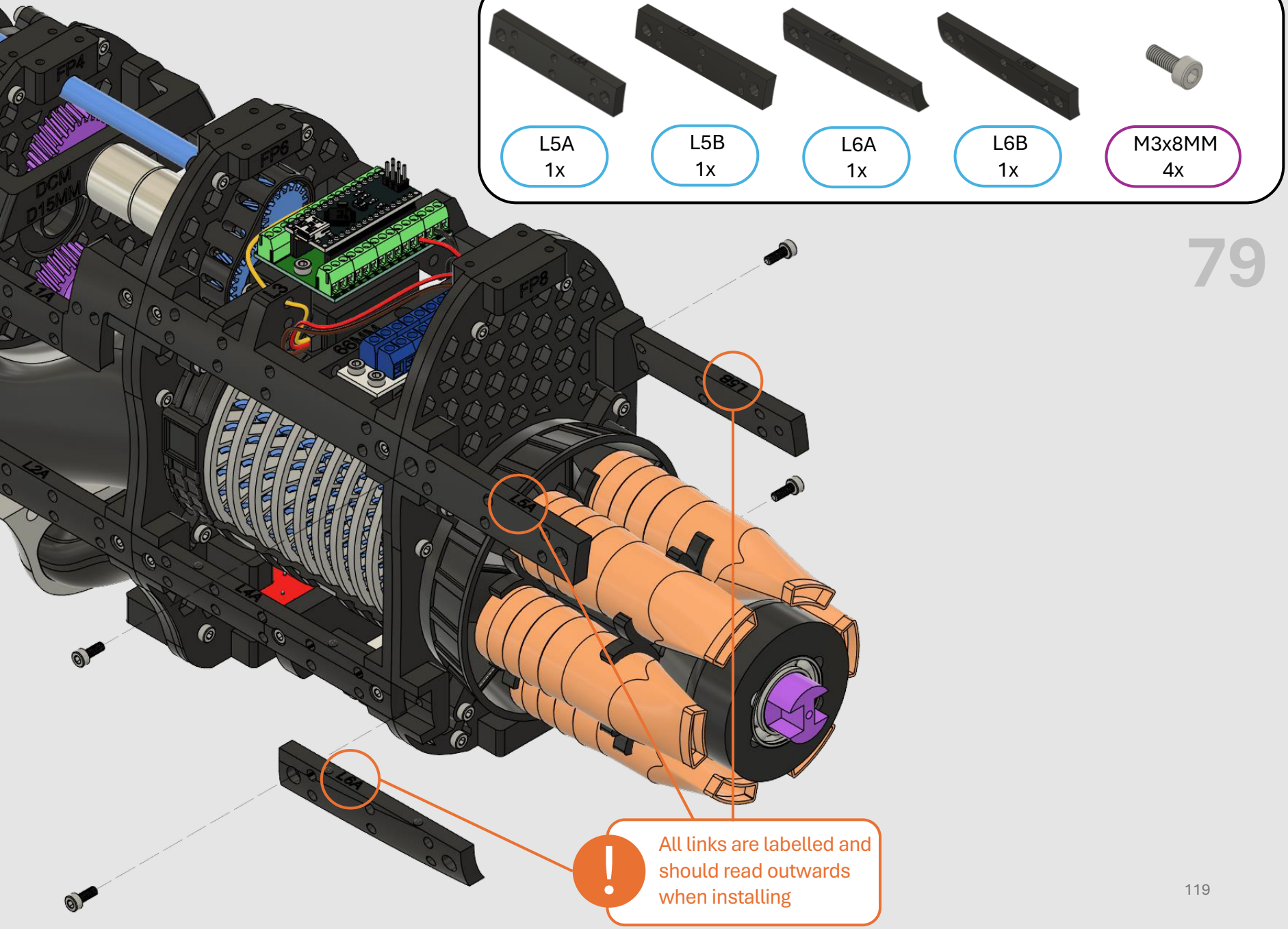
L5A
1x
L5B
1x
L6A
1x
L6B
1x
M3x8MM
4x
79
FP4
FP6
FP8
DCM
D15MM
L1A
L2A
L3A
L4A
L5A
L6A
All links are labelled and should read outwards when installing

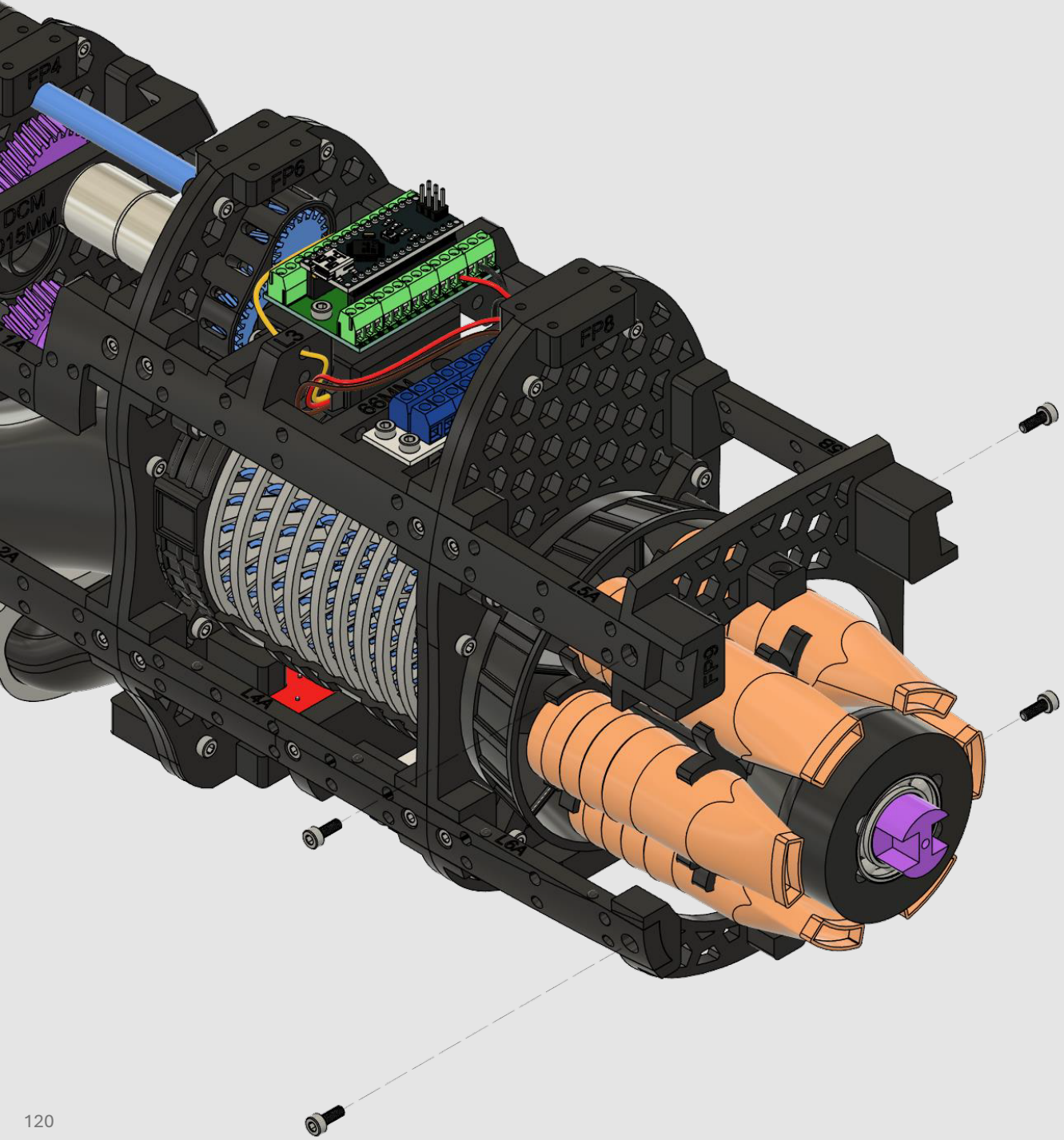

80

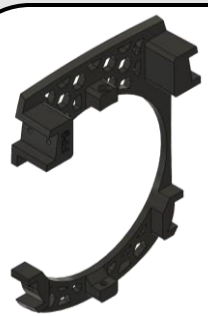

FP9
1x



M3x8MM
4x

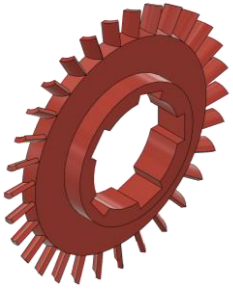

HPT – 9, 10 & 11
1 ea.



HPTS – 9, 10 & 11
1 ea.

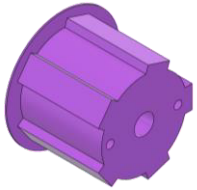

POWER SHAFT D
1x

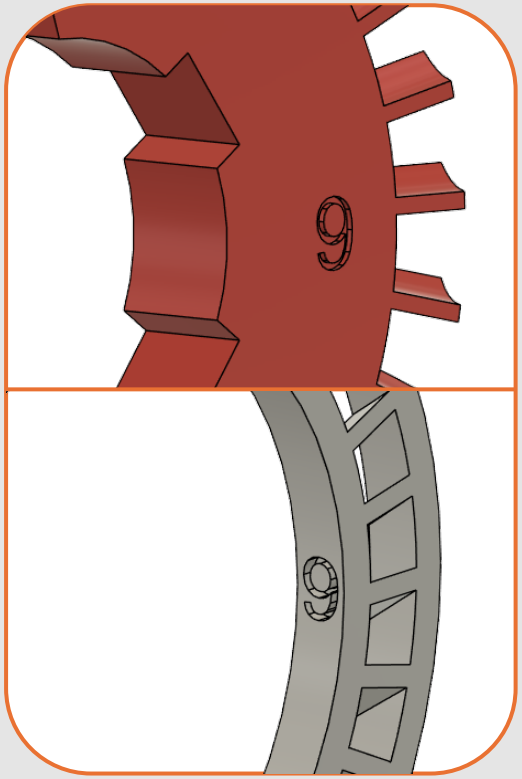

81

Each “HPT” and “HPTS” are numbered to ensure the order of assembly is correct. **Start from 9**

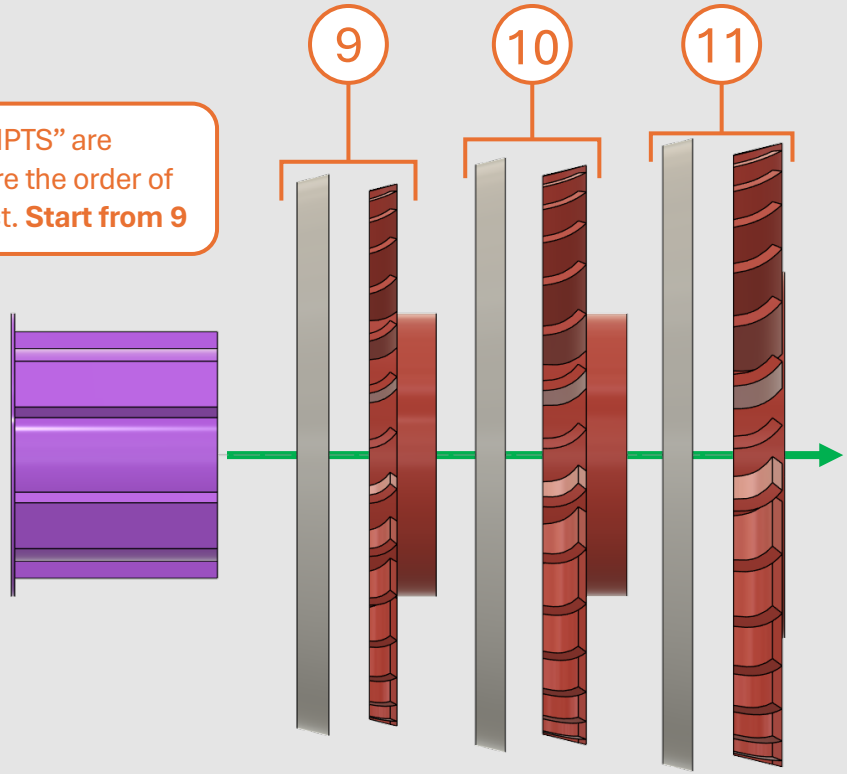



COMBUSTION CASING
1x

82

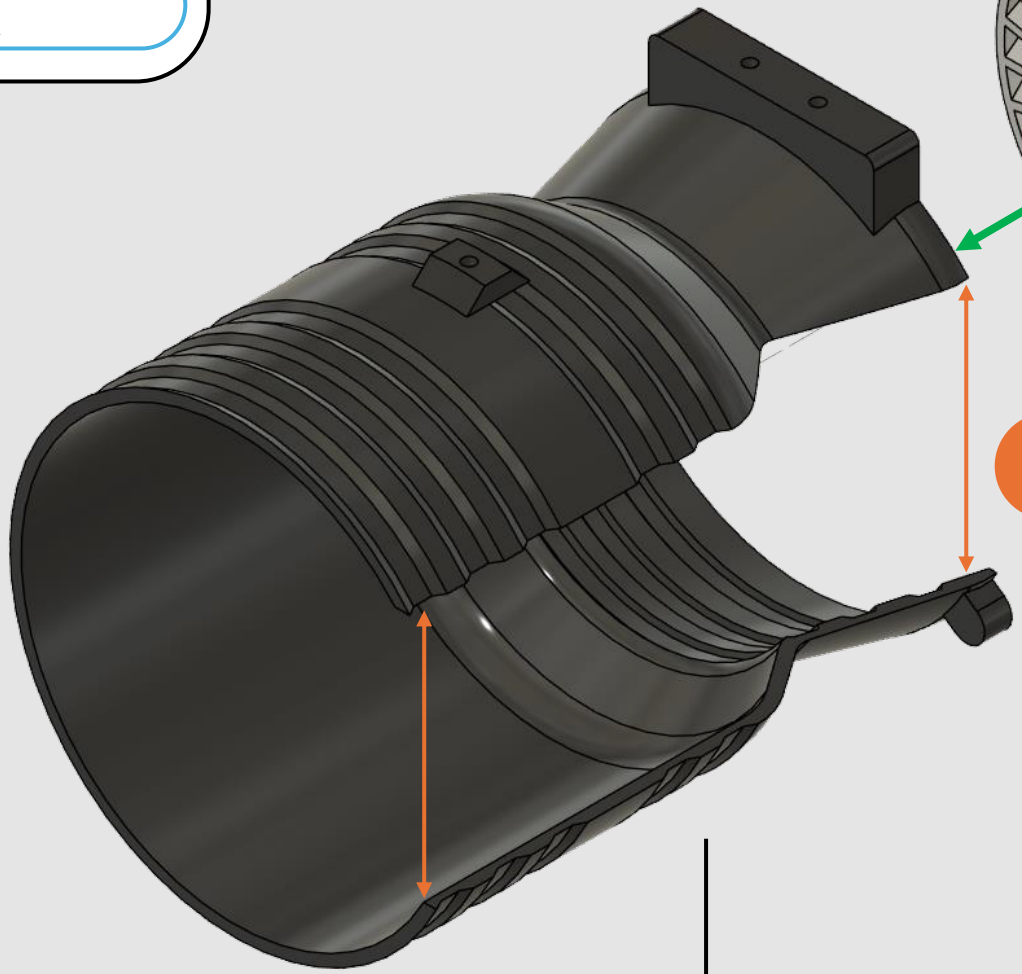

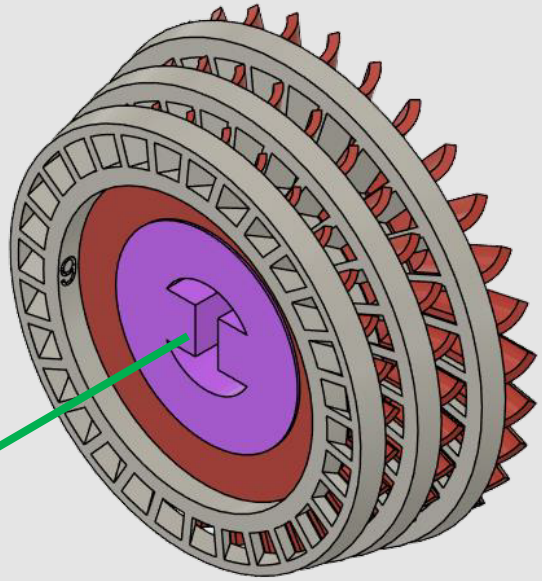

To insert the previous assembly, slightly flex “COMBUSTION CASING” and use the slots to align each “HPTS”:

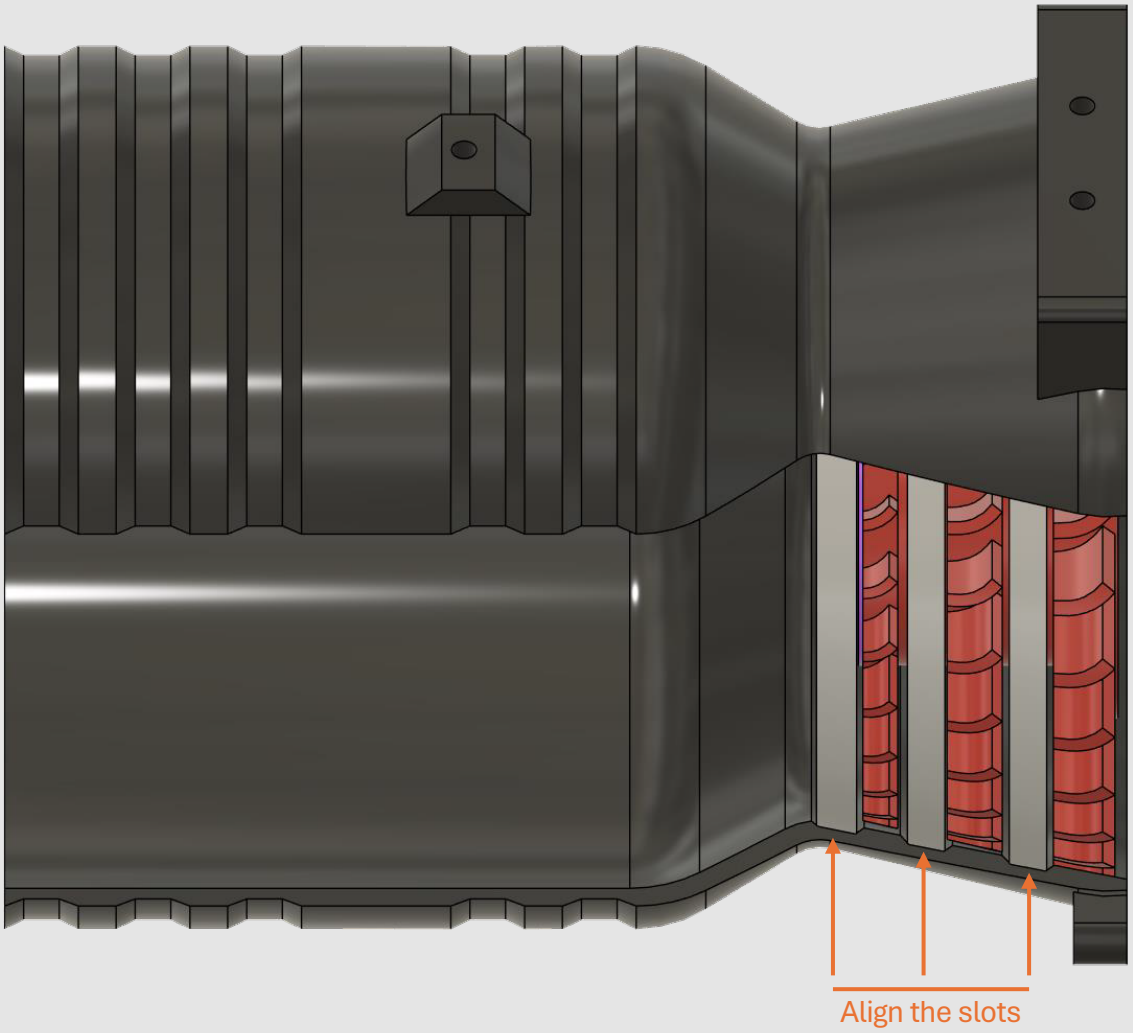
Align the slots

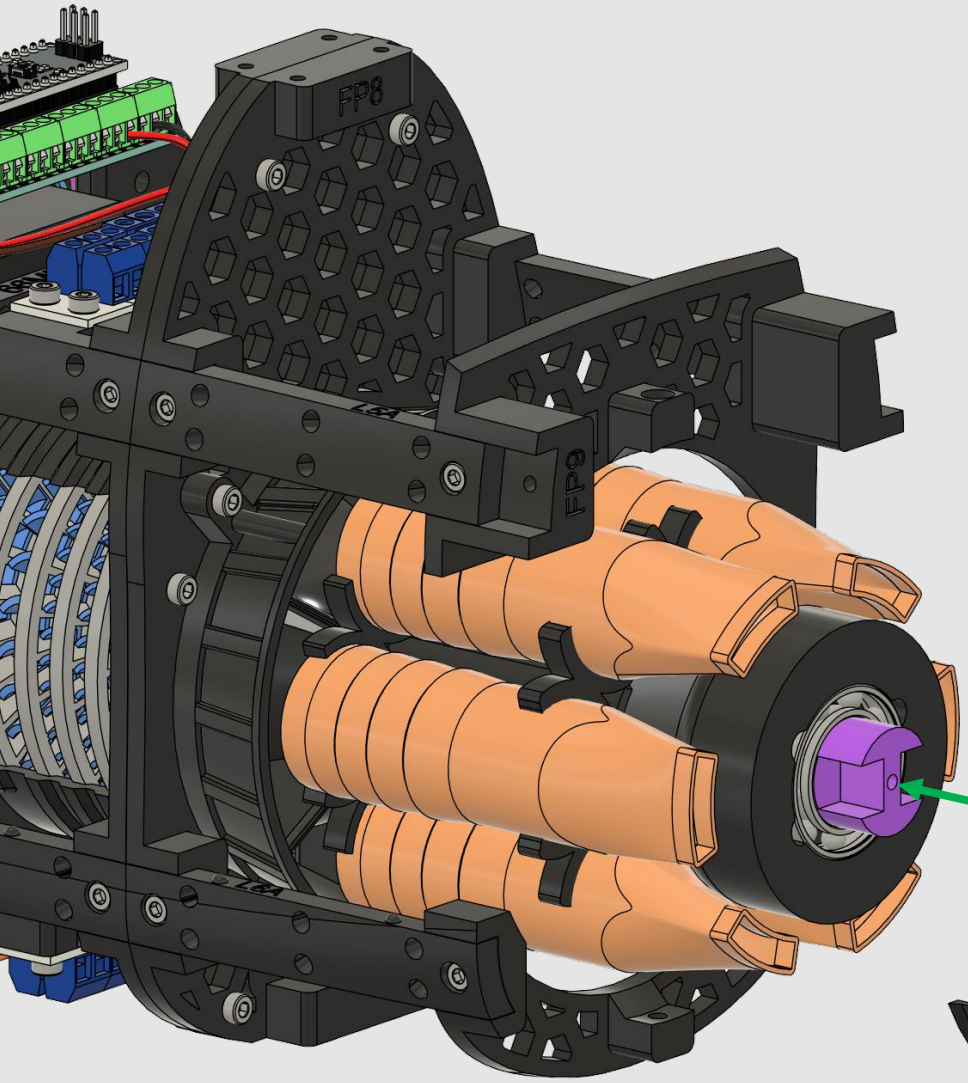

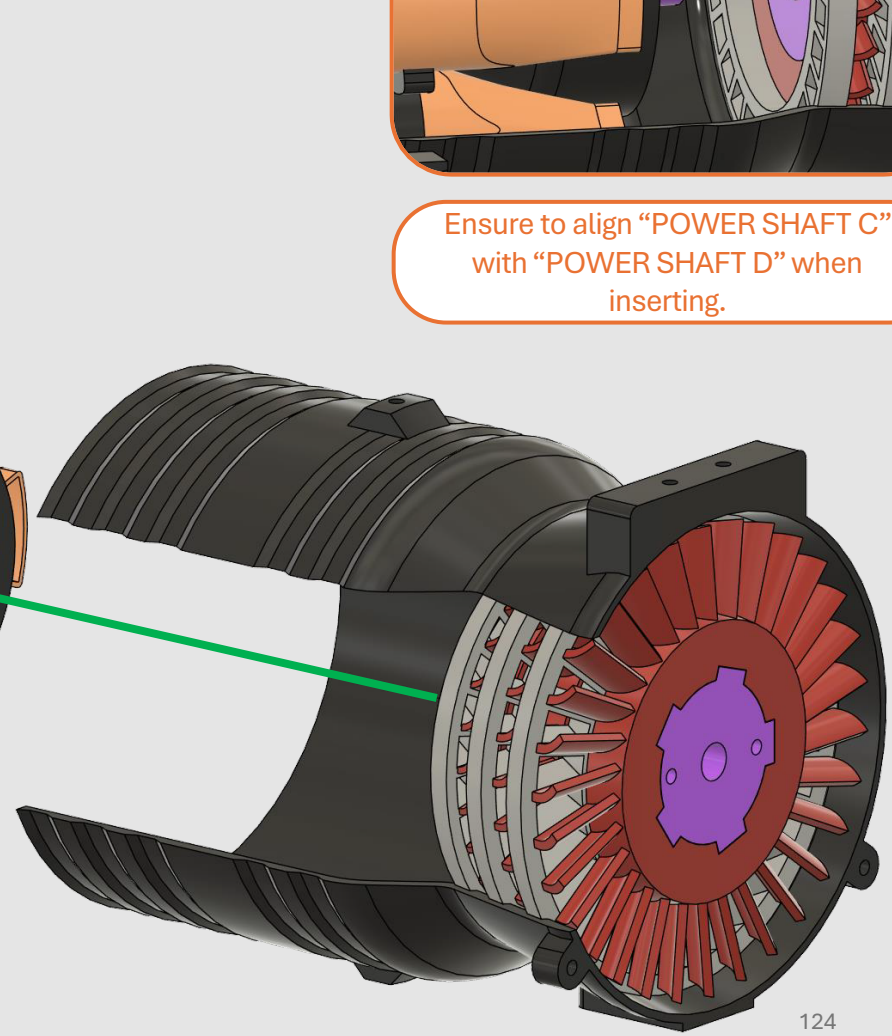

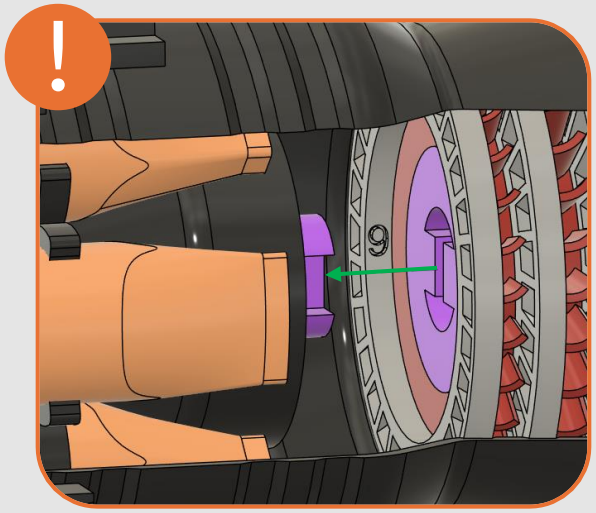

Ensure to align “POWER SHAFT C” with “POWER SHAFT D” when inserting.

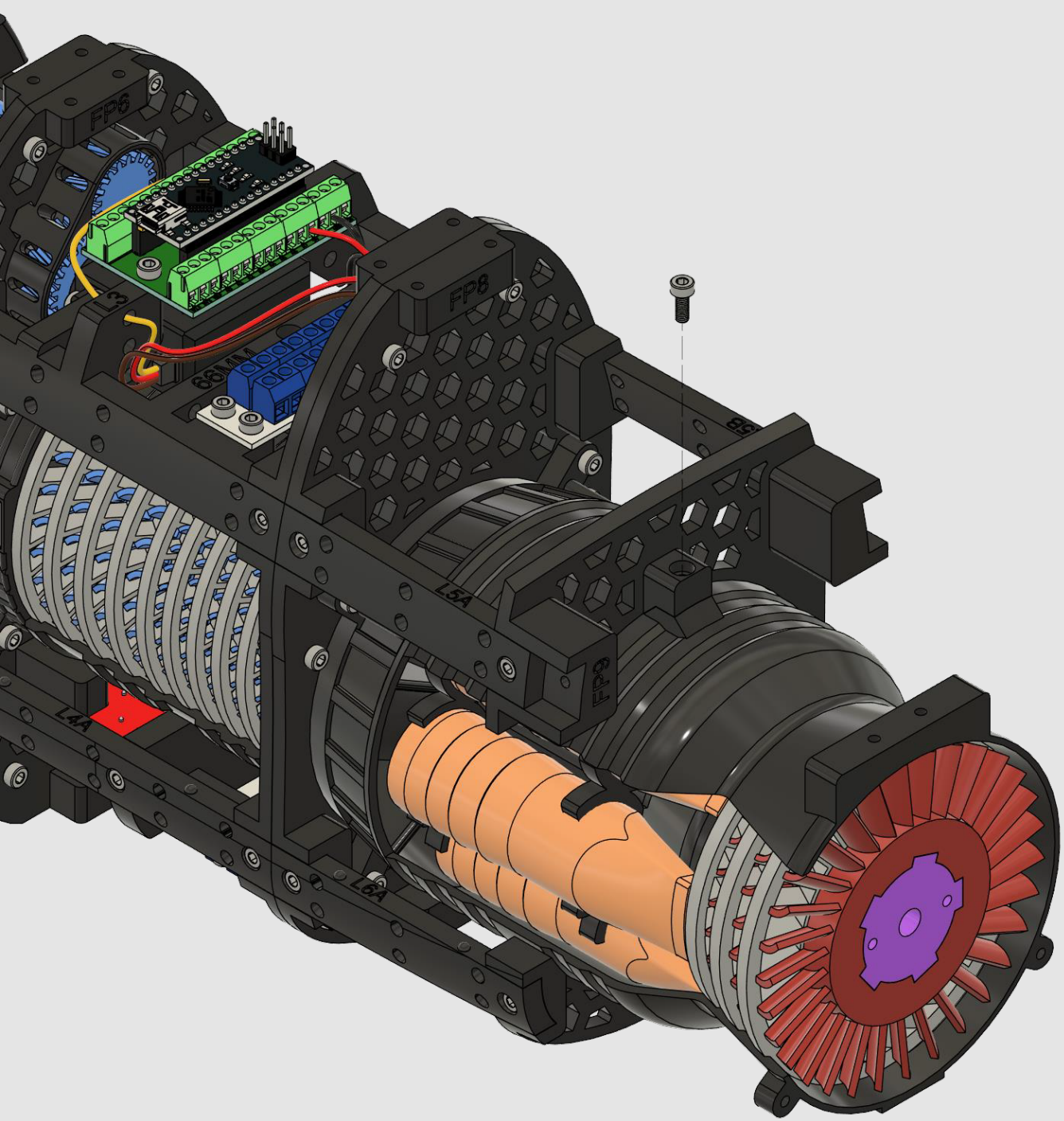



M3x8MM
1x

85

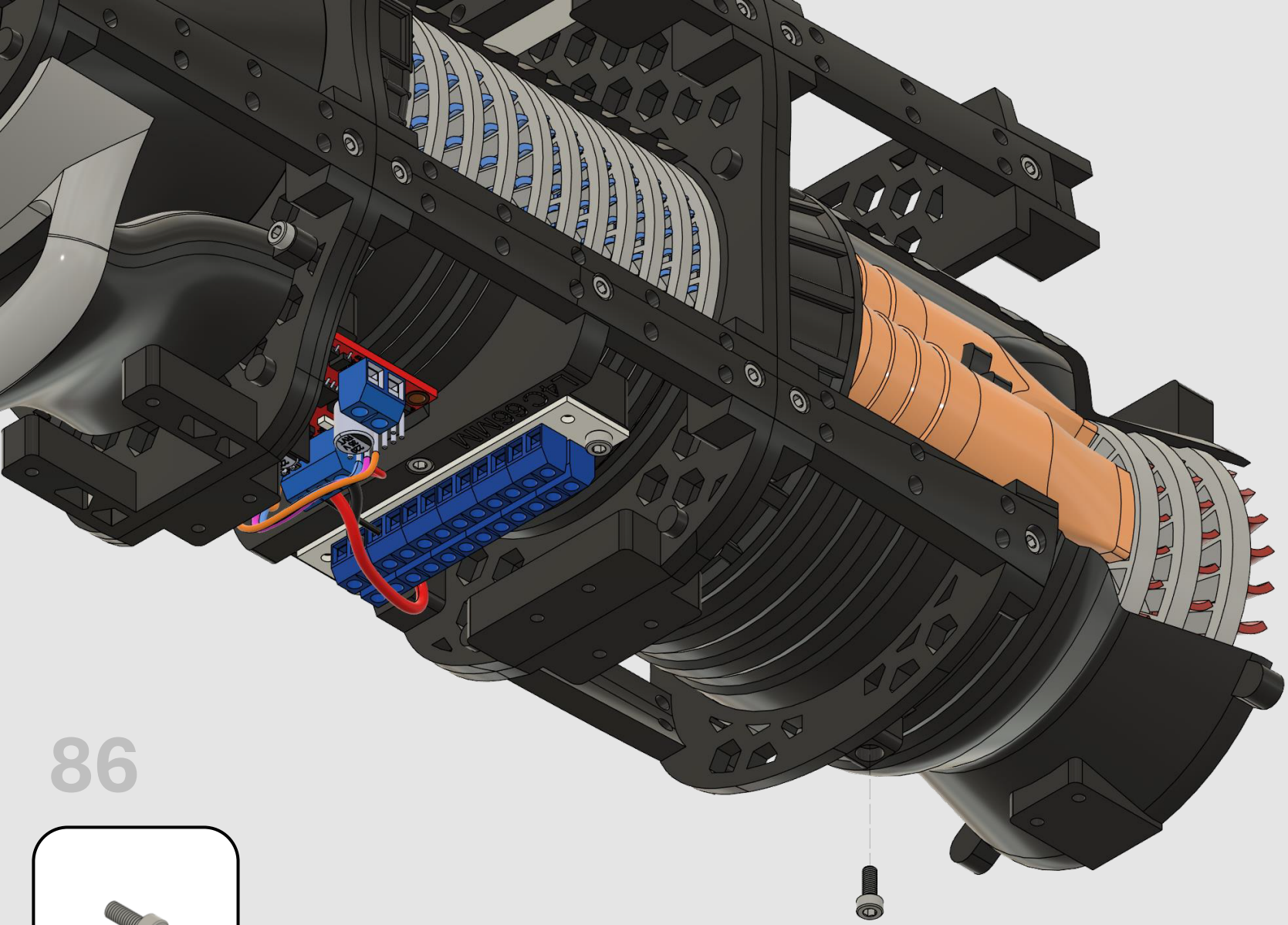

86



M3x8MM
1x

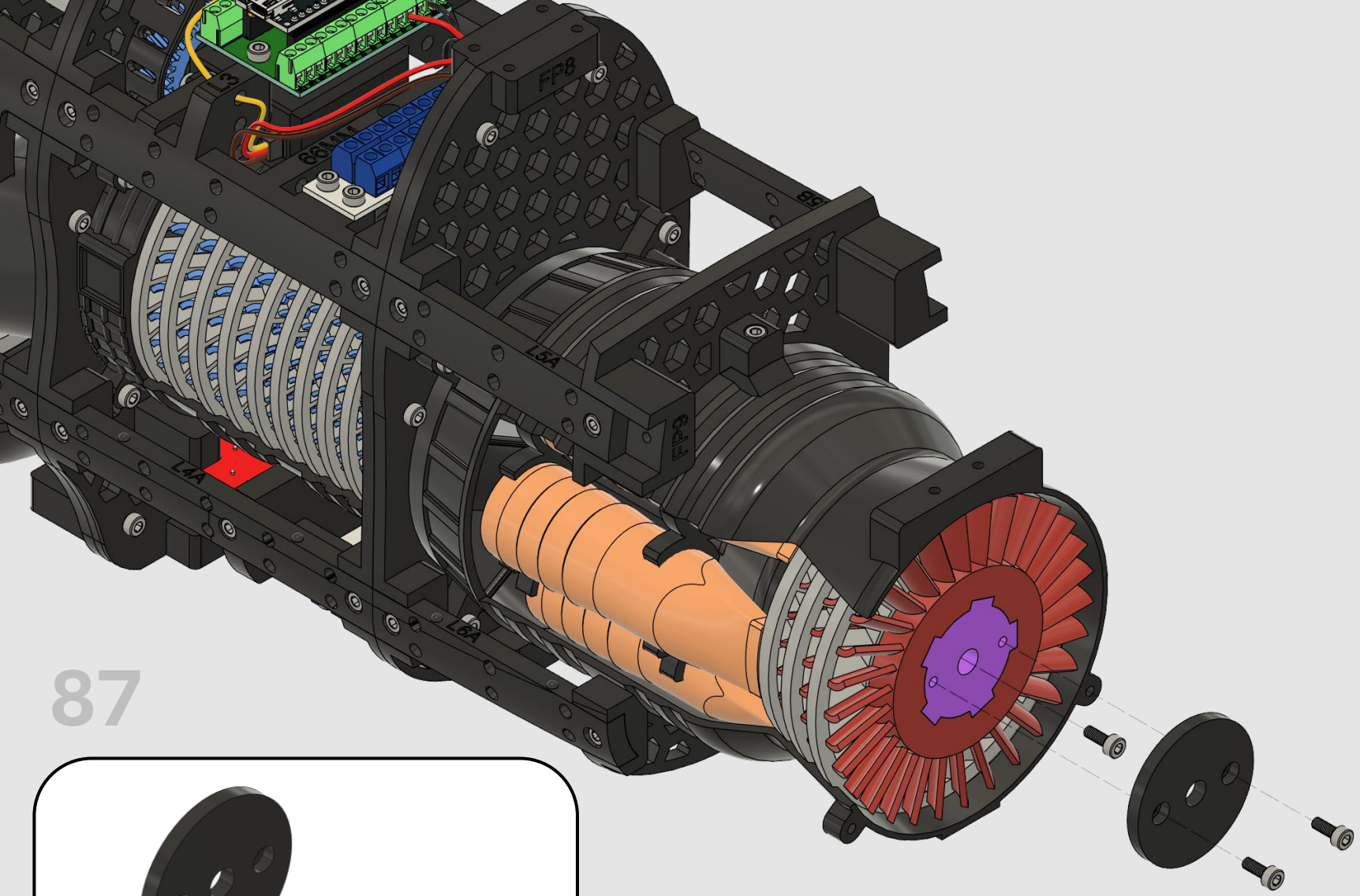

87

POWER SHAFT CAP
1x



M3x8MM
3x

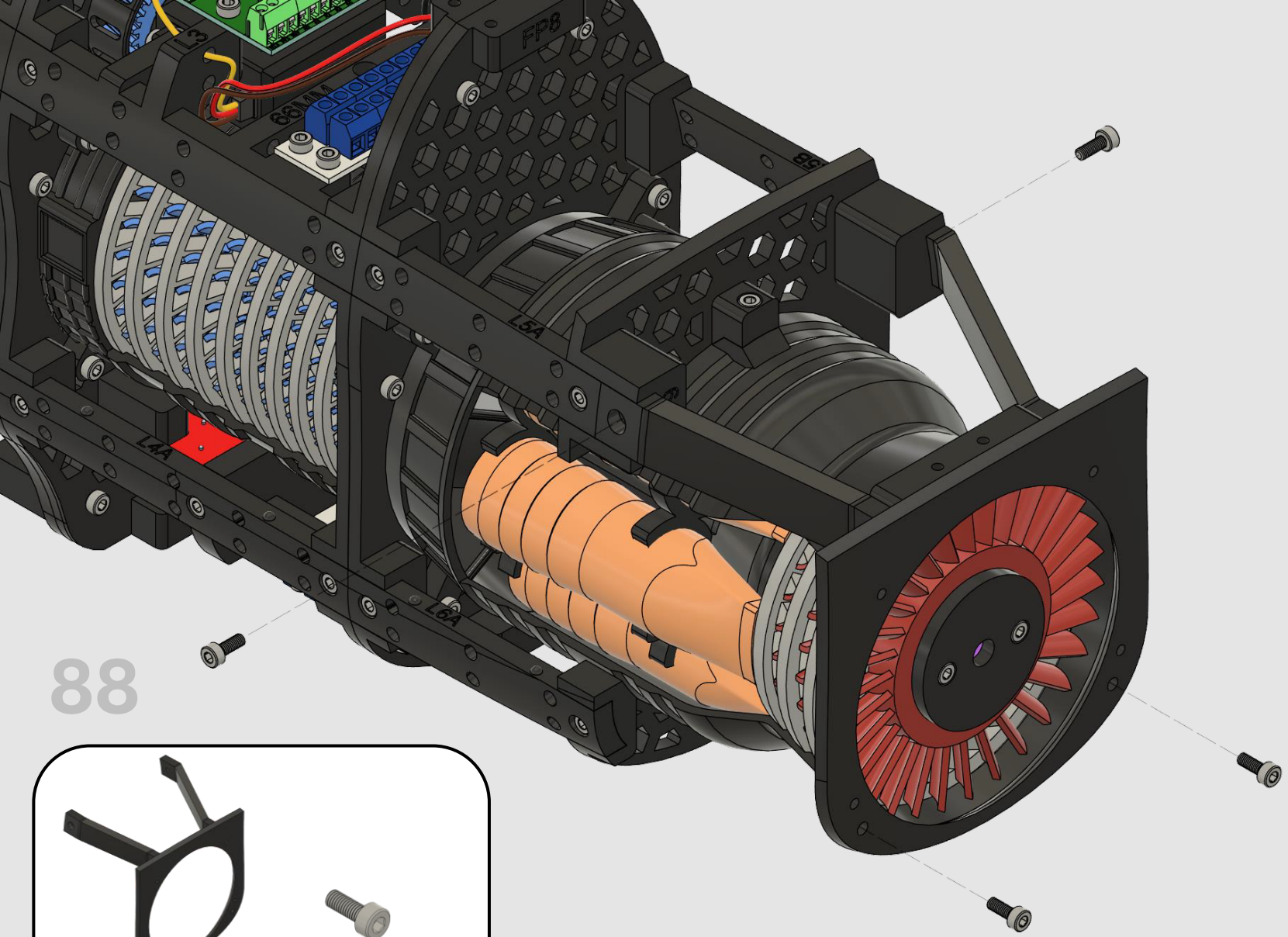

88

FP10
1x

M3x8MM
4x

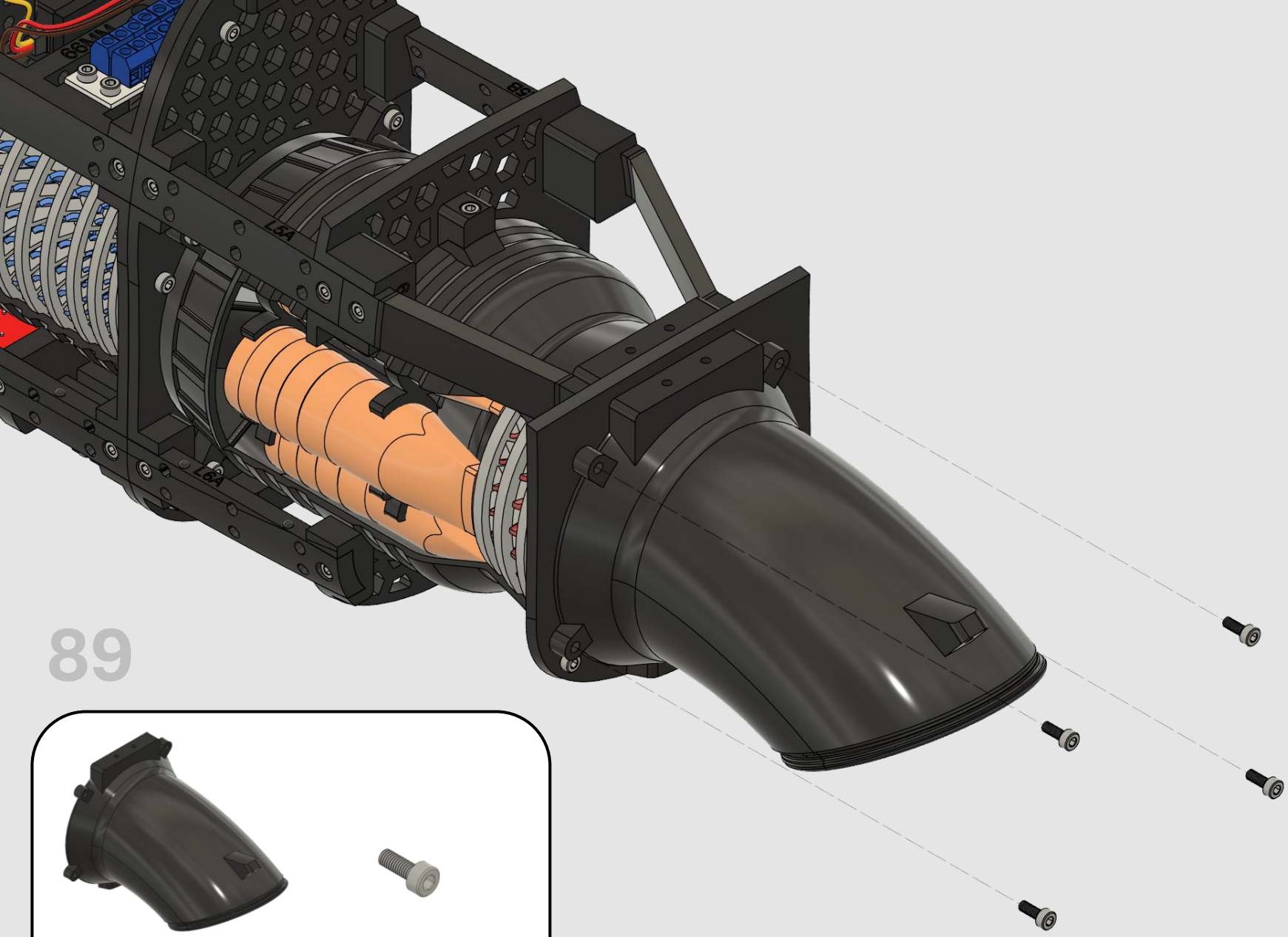

EXHAUST
1x

M3x8MM
4x

Frame Subassembly D Completed!

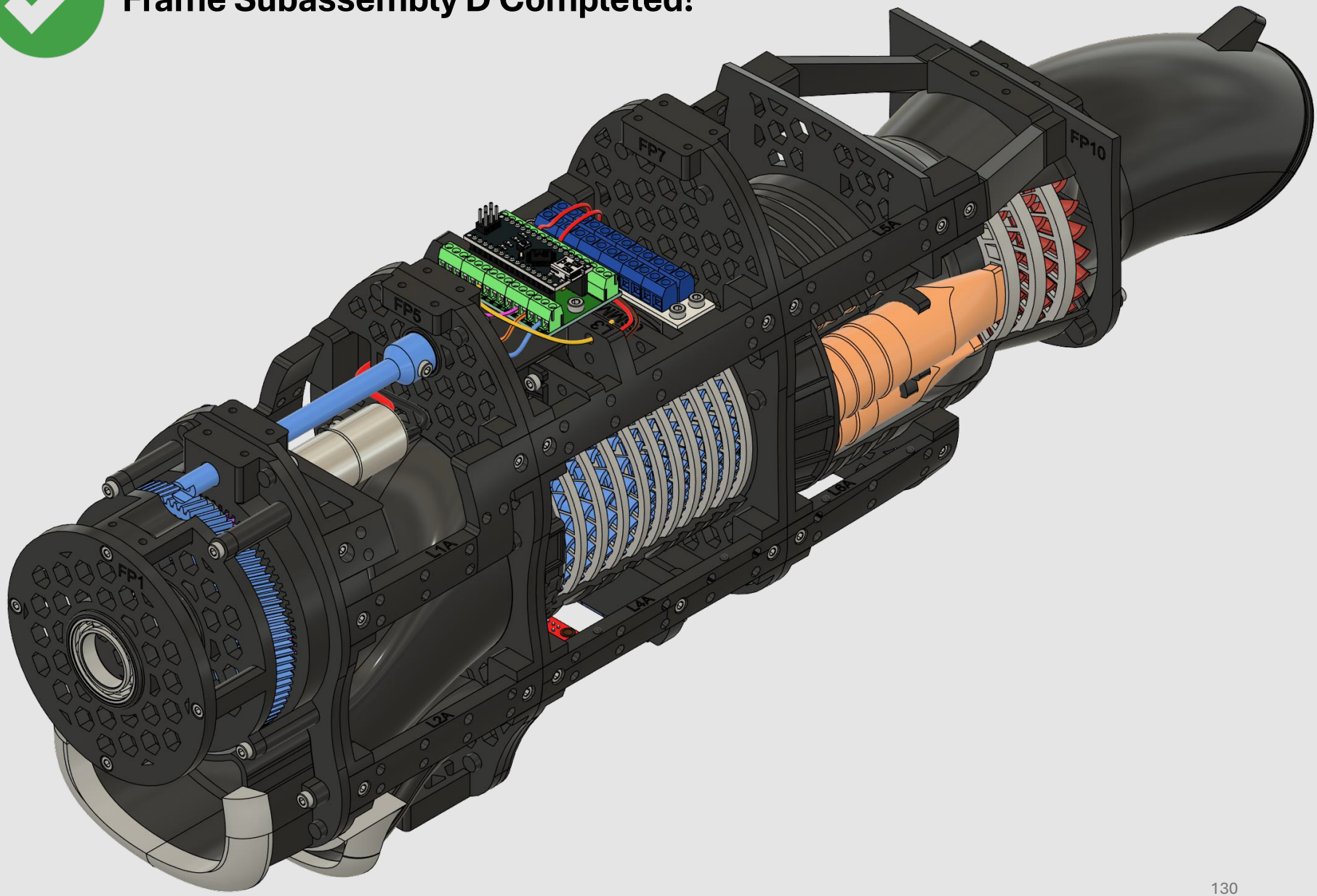

6. Controls & Power Assembly

In this section we will assemble the power and controls components.

Required 3D Printed Parts:

- ❑ CONTROLS CASING A
- ❑ CONTROLS CASING B
- ❑ POWER CASING

Required Non-Printed Parts:

- ❑ 10K Linear Potentiometer w/ Nut (Wired) 2x
- ❑ 2.1MM Power Jack w/ Nut (Wired) 1x

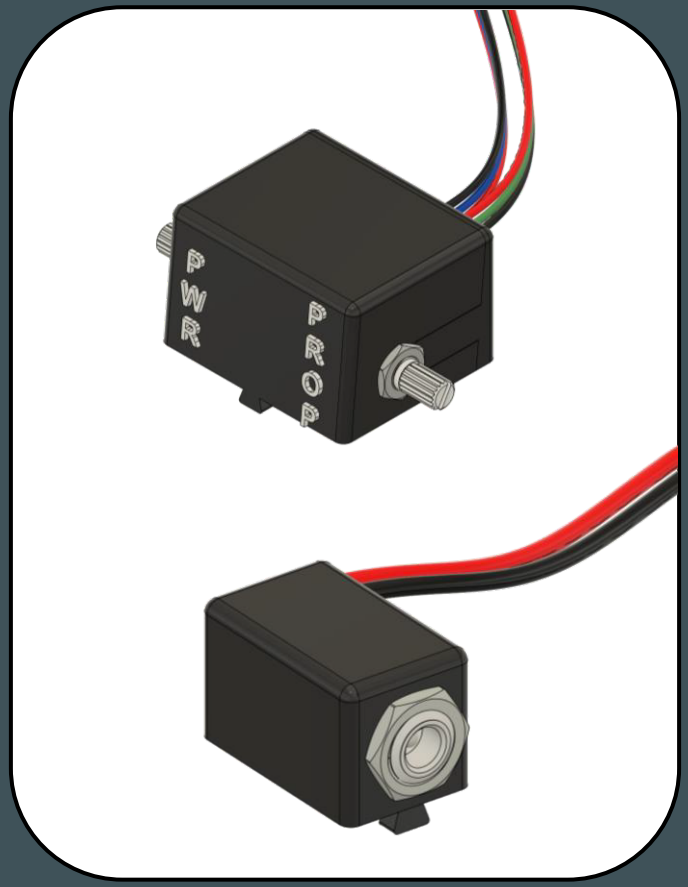



CONTROLS CASING A
1x

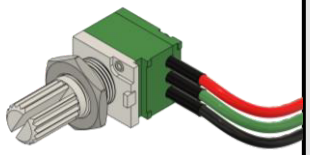

10K LINEAR
POTENTIOMETER
2x

90

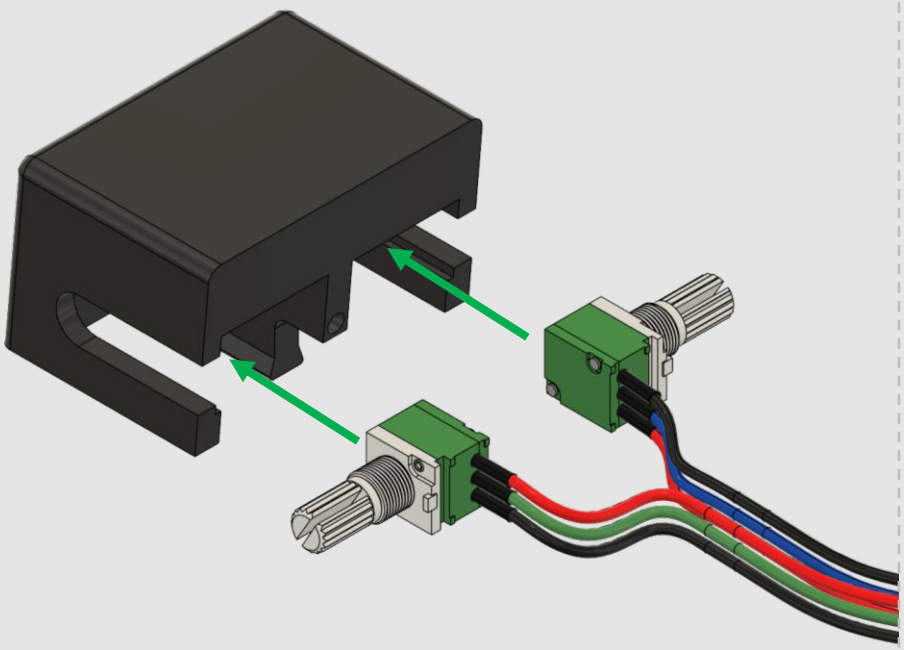



M6 NUT
2x

91

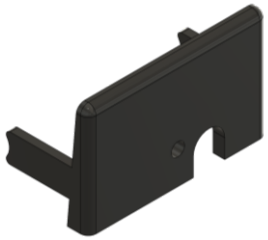

CONTROLS CASING B
1x



M3x8MM
1x

92

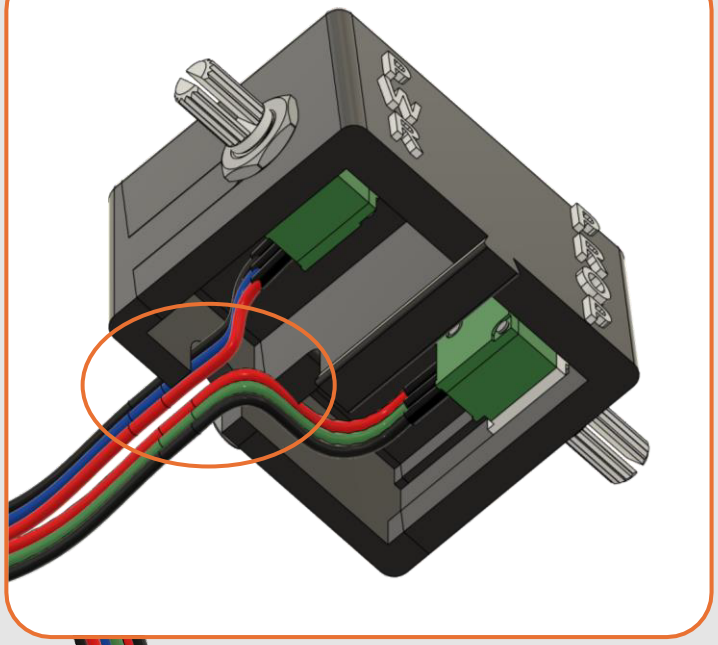

Use the following cutouts for the potentiometer wiring.

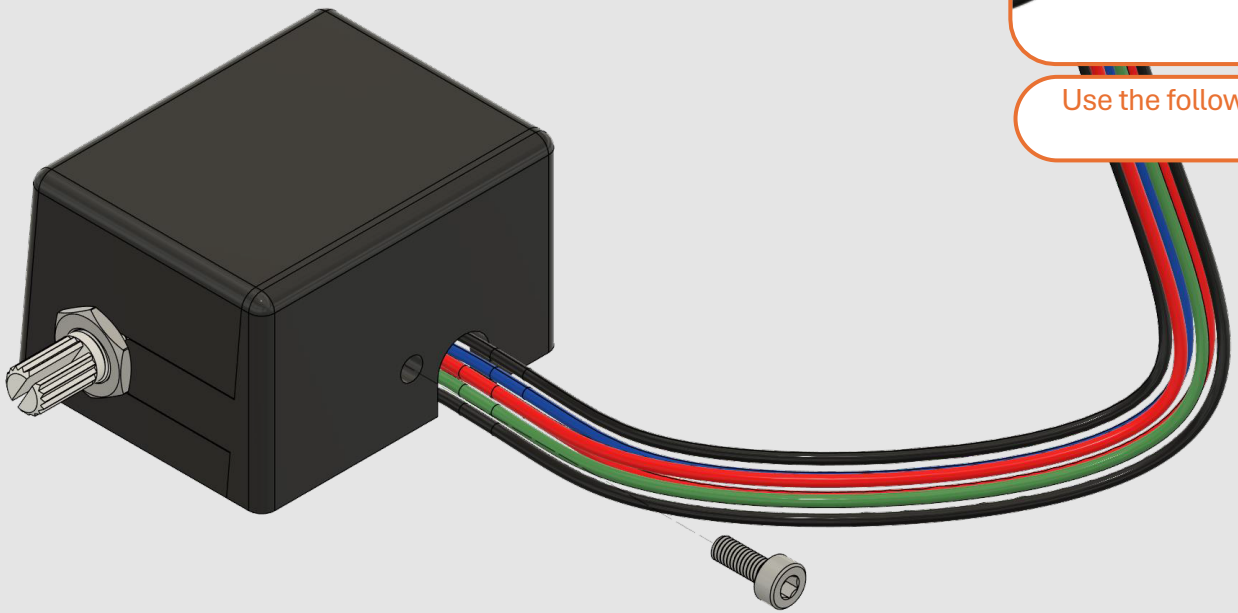

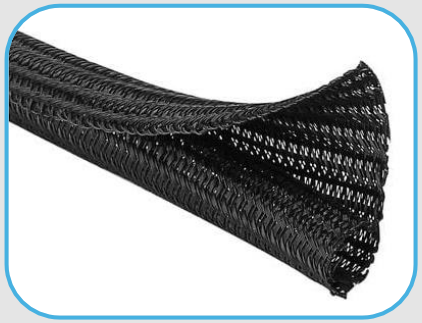

Before we wire both potentiometers, it is a good time to add wire wrap.

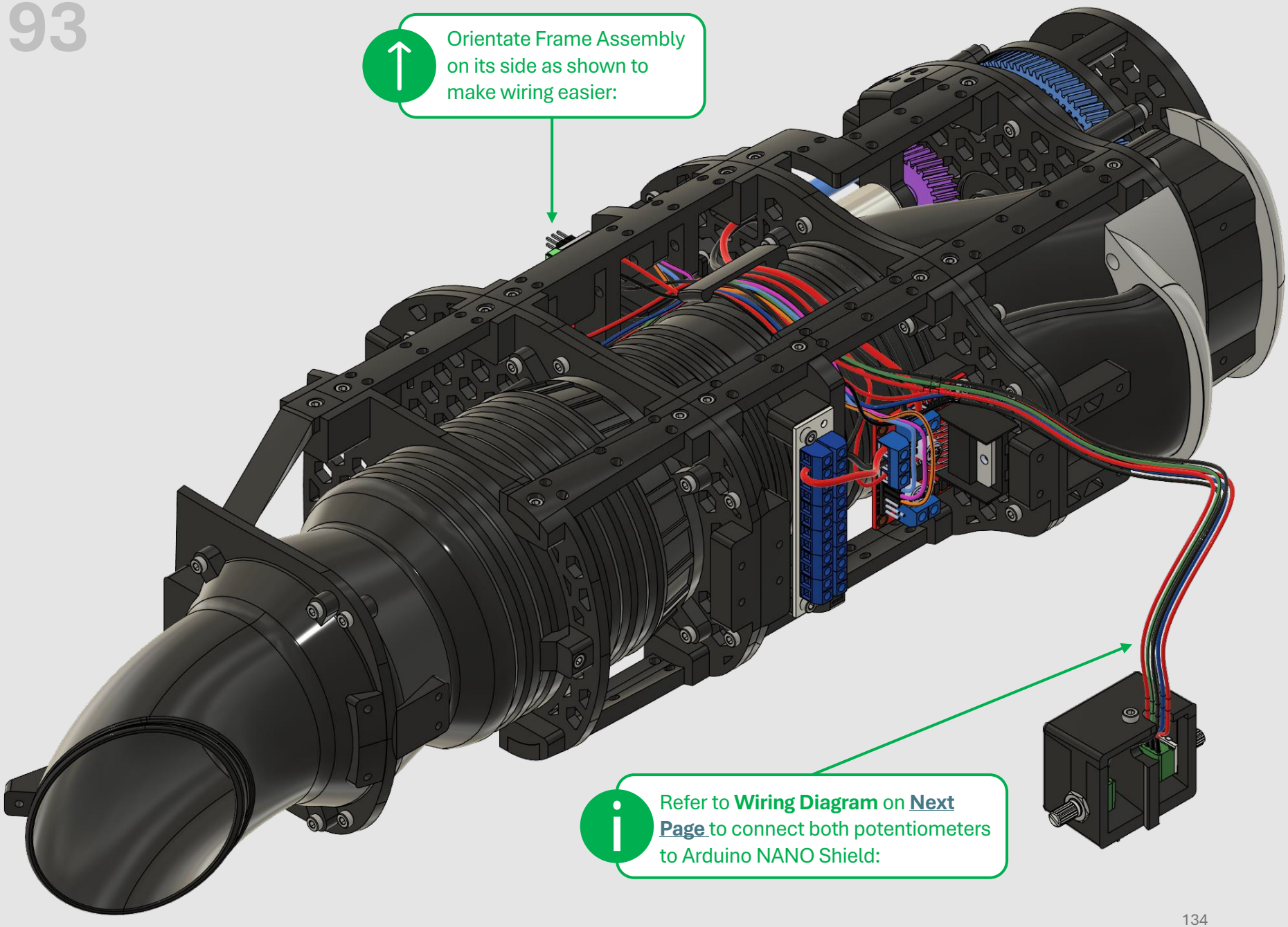
Orientate Frame Assembly on its side as shown to make wiring easier:
Refer to **Wiring Diagram** on **Next Page** to connect both potentiometers to Arduino NANO Shield:

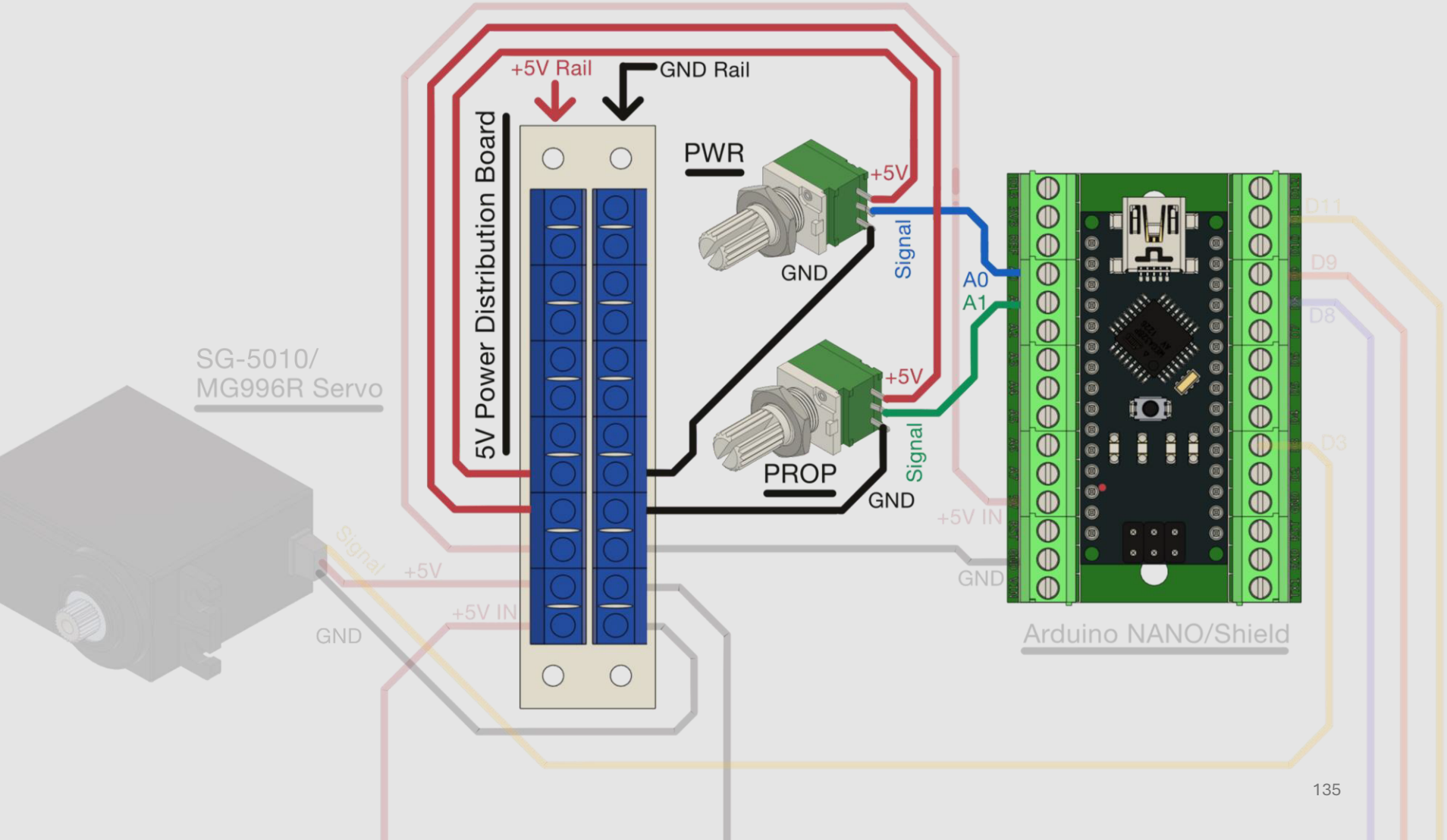
+5V Rail
GND Rail
5V Power Distribution Board
PWR
+5V
GND
Signal
A0
A1
+5V
PROP
GND
Signal
+5V IN
GND
SG-5010/
MG996R Servo
Signal
+5V
+5V IN
GND
Arduino NANO/Shield
D11
D9
D8
D3



POWER CASING
1x



2.1MM POWER JACK (WIRED)
1x

95

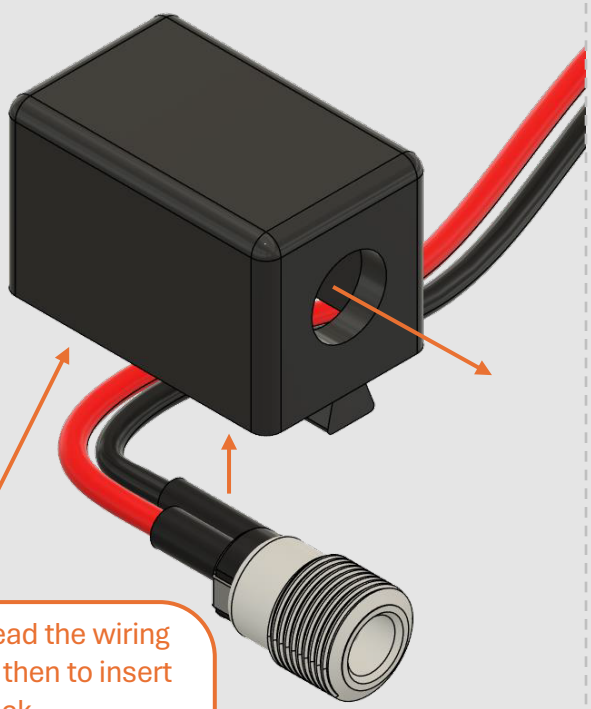

It may be easier to thread the wiring through the inside first then to insert the power jack.

Both hole ends are the same size.



M6 NUT
1x

96

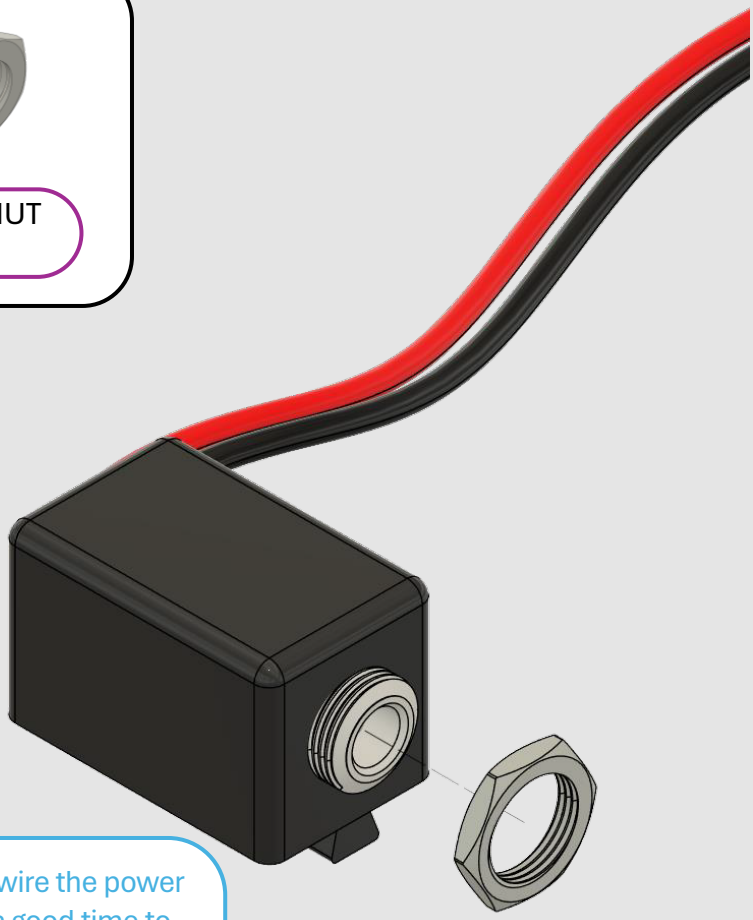

Before we wire the power jack, it is a good time to add wire wrap.

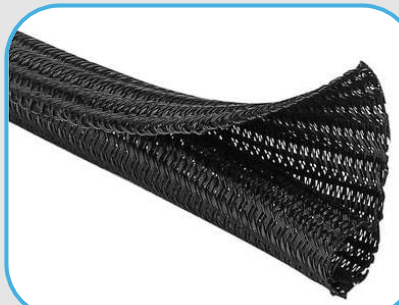

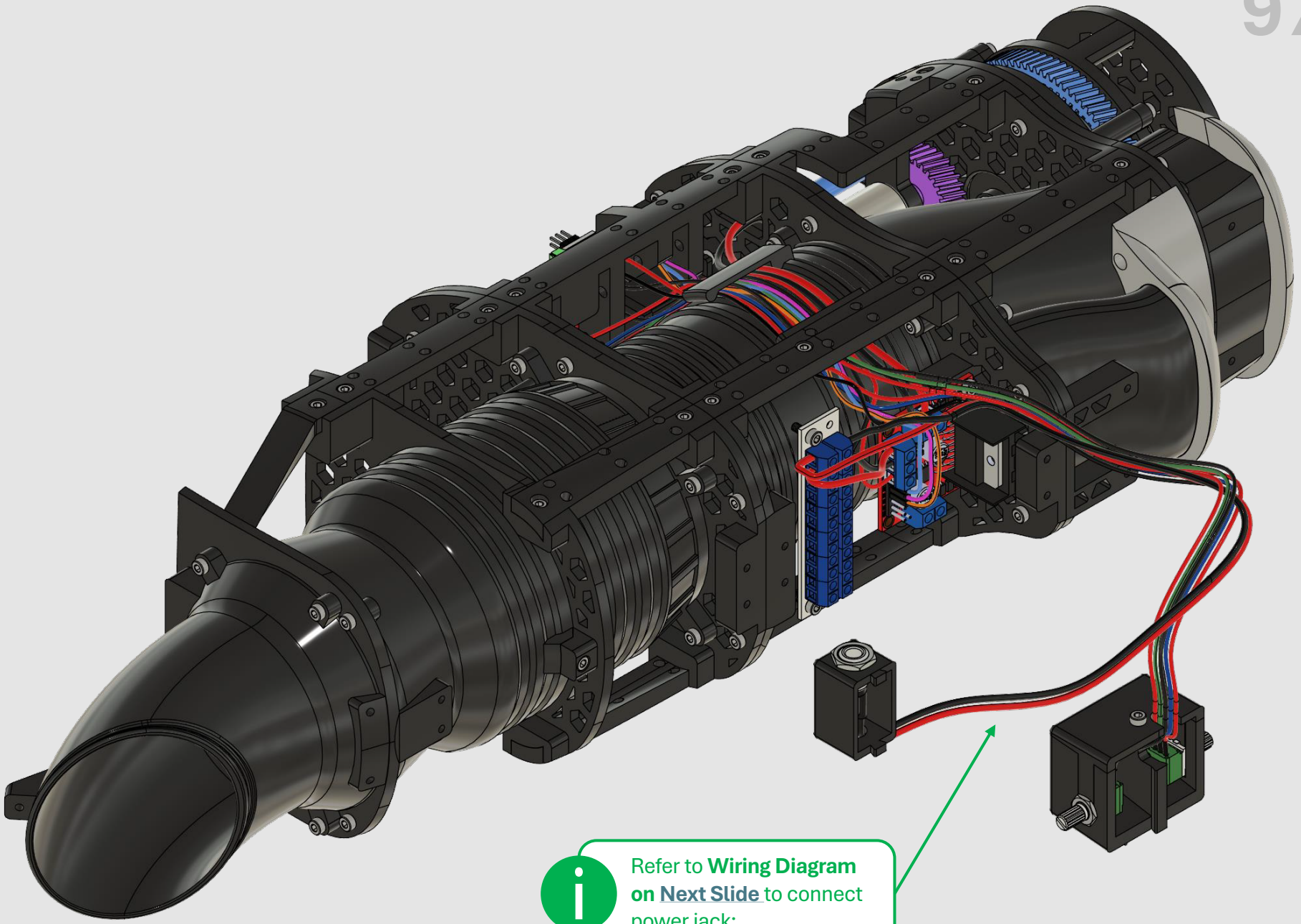

Refer to **Wiring Diagram on Next Slide** to connect power jack:

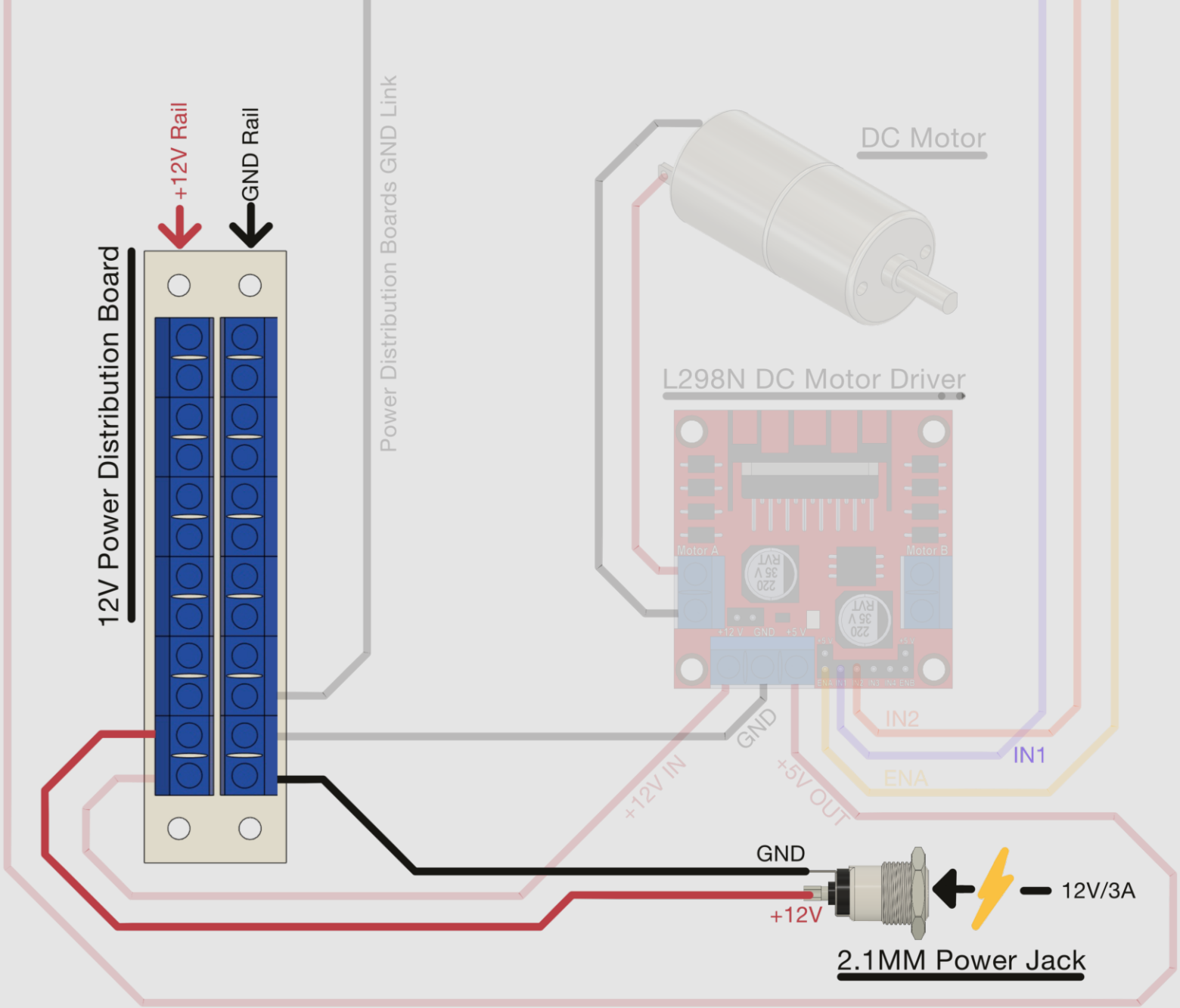
+12V Rail
GND Rail
12V Power Distribution Board
Power Distribution Boards GND Link
DC Motor
L298N DC Motor Driver
Motor A
Motor B
+12 V
GND
+5 V
IN2
IN1
ENA
GND
+12V IN
+5V OUT
GND
+12V
12V/3A
2.1MM Power Jack

7. Power Up & Calibration

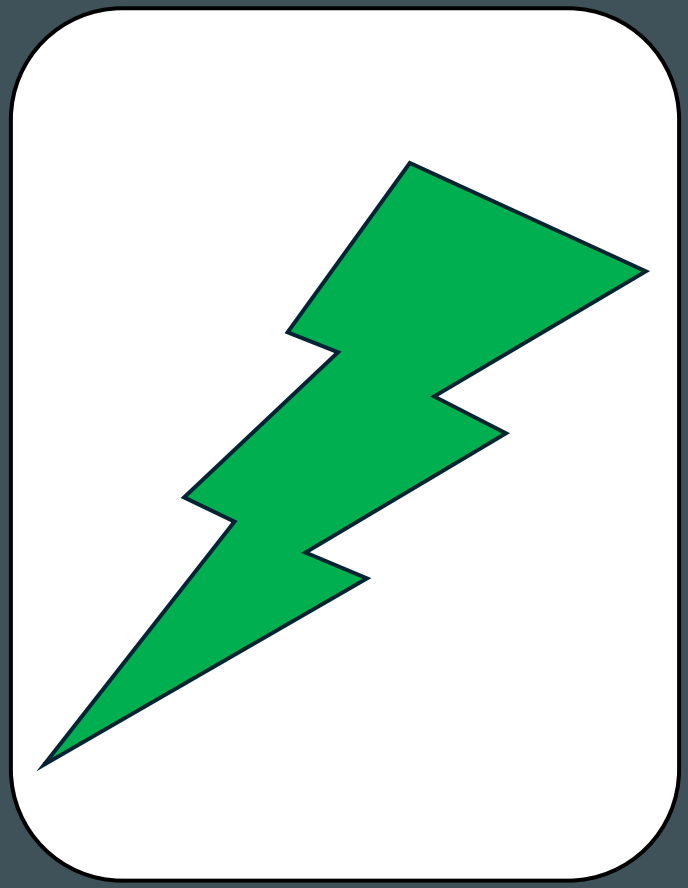

In this section we will power up the model for the first time and begin calibration for the SG-5010 servo.

Required 3D Printed Parts:

- ❑ POWER SHAFT GEAR
- ❑ C-CLIP SIZE A
- ❑ C-CLIP SIZE B
- ❑ PWR LEVER
- ❑ PWR KNOB
- ❑ PROP LEVER
- ❑ PROP KNOB
- ❑ PROP CONTROL GEAR

Required Non-Printed Parts:

❑ M3x8MM Hex Socket Screws	4x
❑ 12V/3A DC Power Supply – 2.1mm Plug	1x

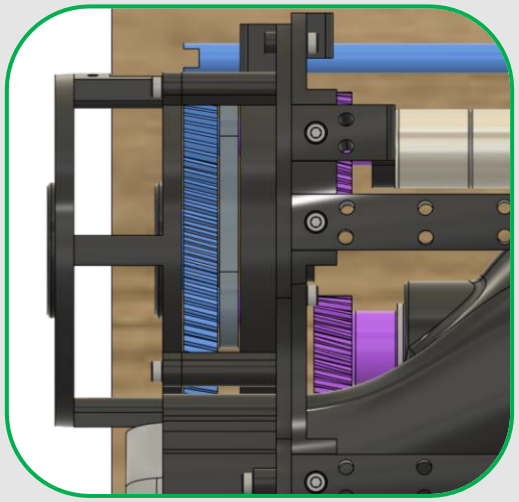

Before testing, orientate the model as shown, letting FP1 overhang a table to allow the Propeller Assembly to get attached while we calibrate.

100





PROPELLER ASSEMBLY

POWER SHAFT GEAR
1x

Use 1 hand to insert “PROPELLER ASSEMBLY” and the other two hold “POWER SHAFT GEAR” to mate.

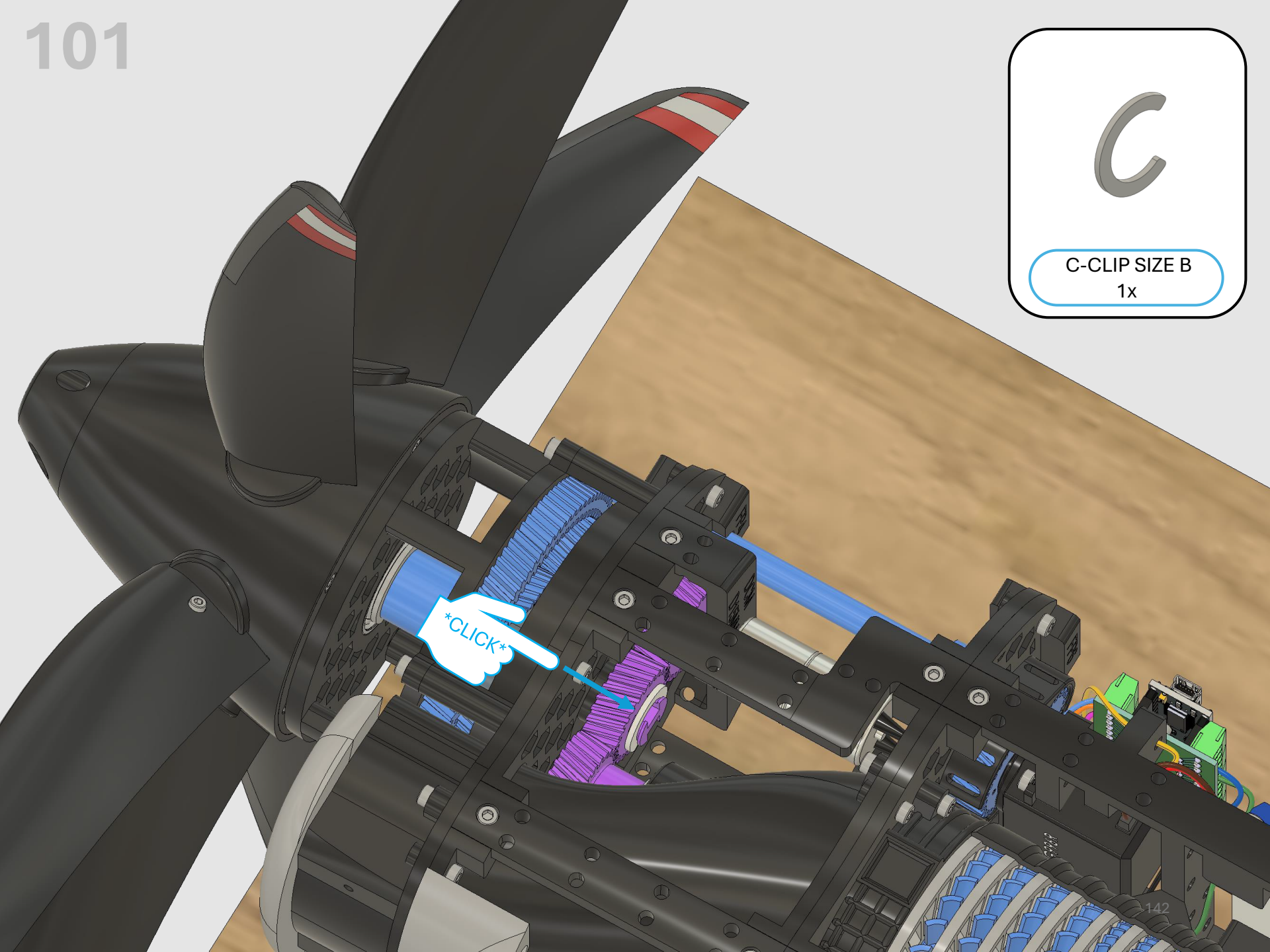
C
C-CLIP SIZE B
1x
CLICK

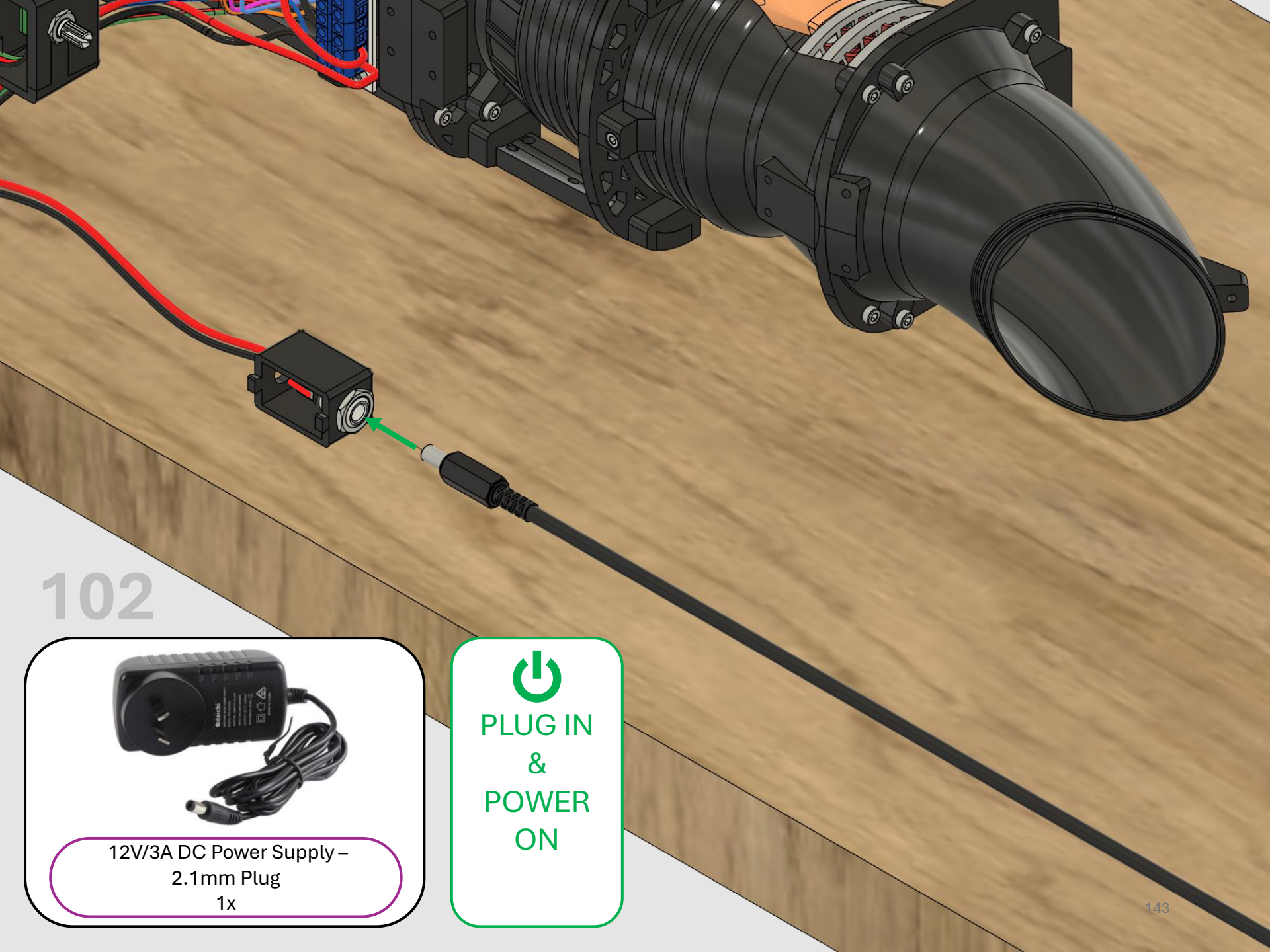

102

12V/3A DC Power Supply –
2.1mm Plug
1x

PLUG IN
&
POWER
ON

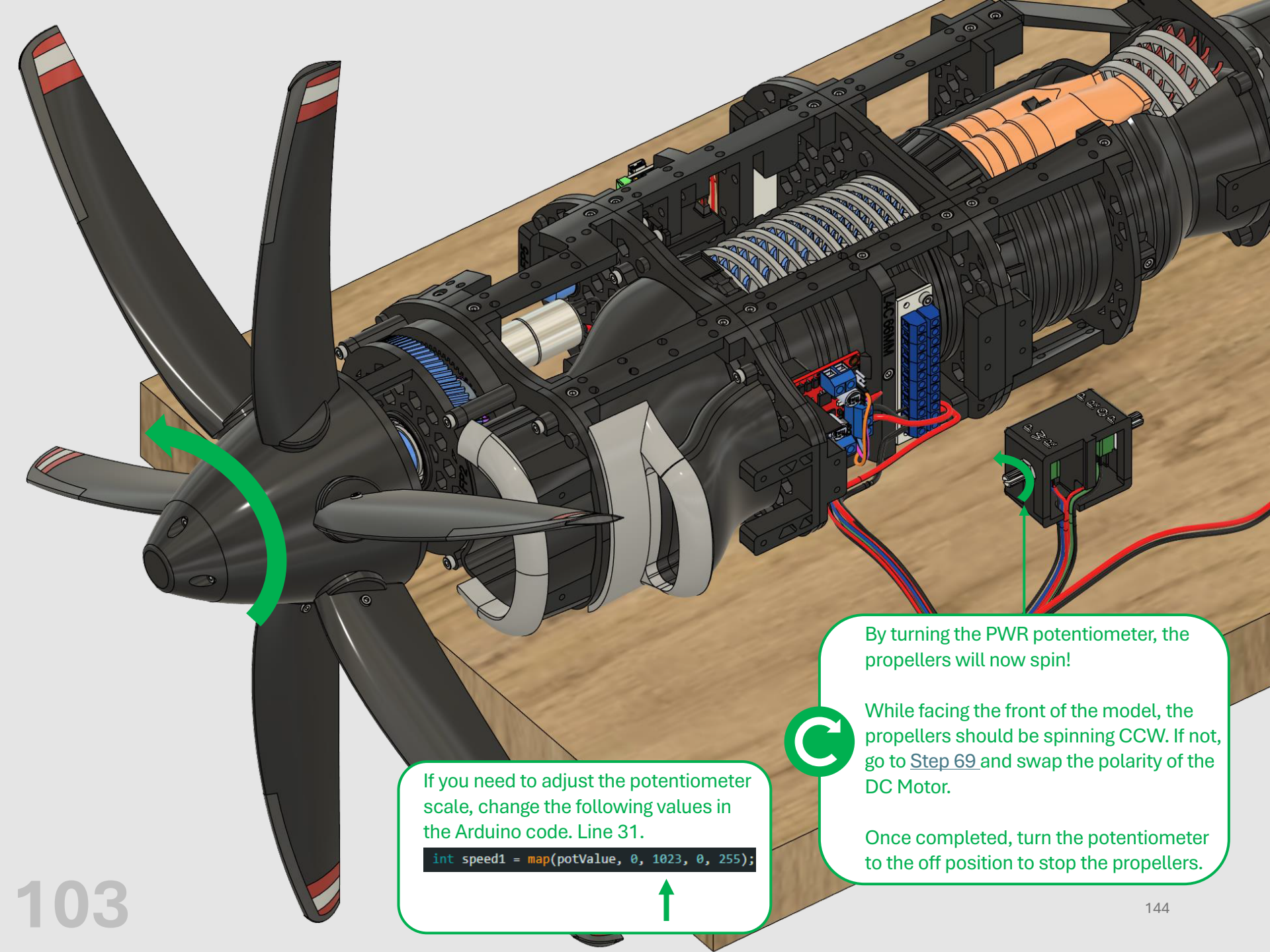

By turning the PWR potentiometer, the propellers will now spin!

While facing the front of the model, the propellers should be spinning CCW. If not, go to Step 69 and swap the polarity of the DC Motor.

Once completed, turn the potentiometer to the off position to stop the propellers.

If you need to adjust the potentiometer scale, change the following values in the Arduino code. Line 31.

```
int speed1 = map(potValue, 0, 1023, 0, 255);
```

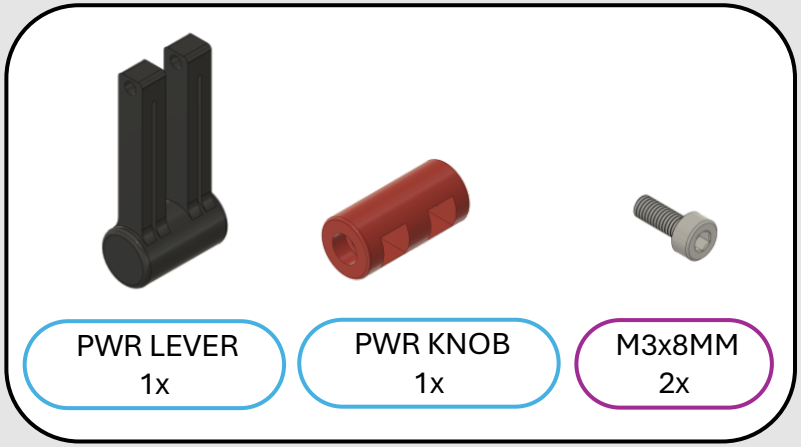
PWR LEVER
1x
PWR KNOB
1x
M3x8MM
2x

104

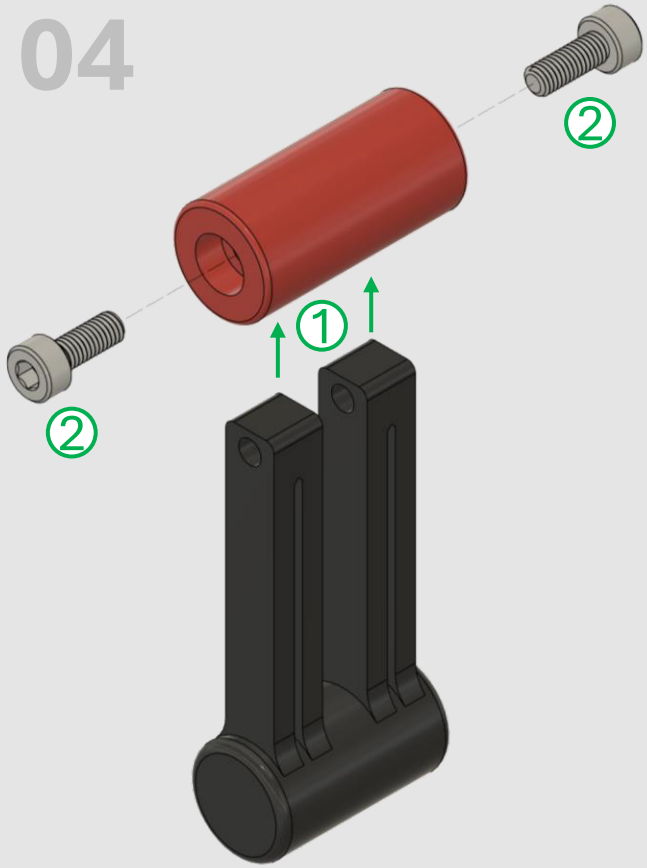
2
1
2

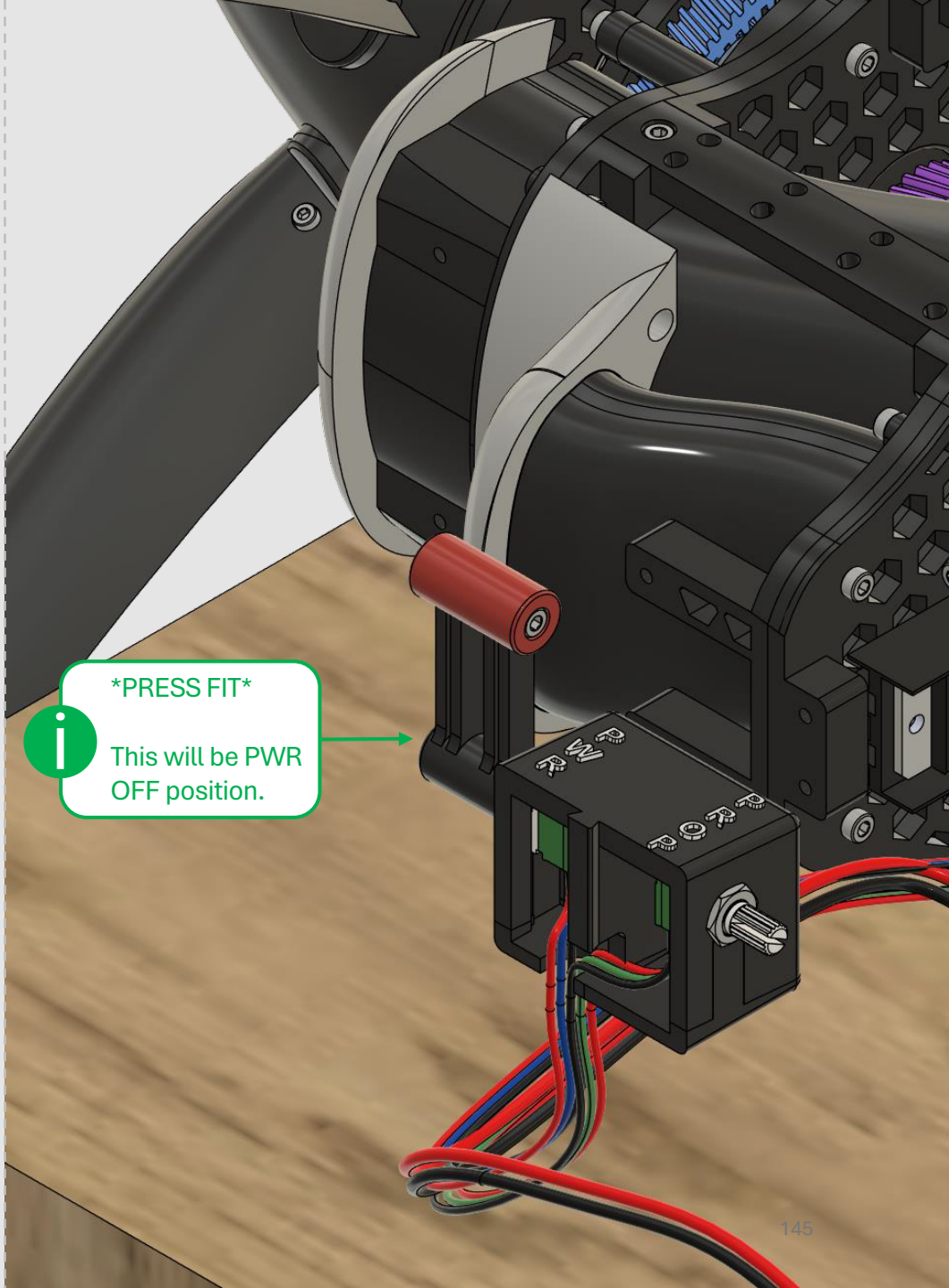
PRESS FIT
This will be PWR OFF position.
PWR
PWR

By turning the PROP potentiometer, you should see the servo and linkage move. We need to find the centre, so we don't exceed the mechanical angle of the propeller pitch.

We can approximate this by turning the potentiometer from 0 degrees to 300 degrees and guess where the centre is. We can always adjust this later.

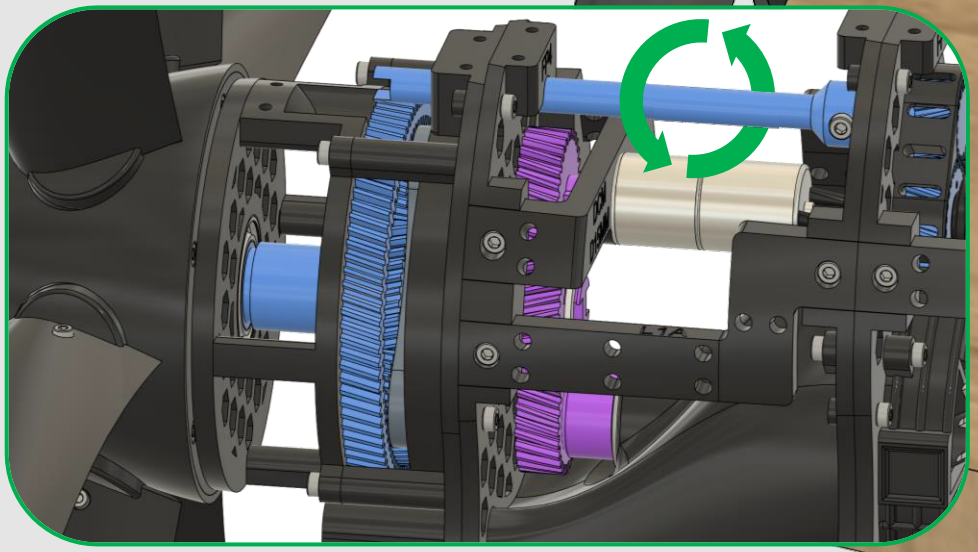



PROP LEVER
1x

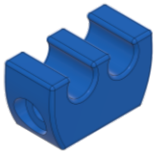

PROP KNOB
1x



M3x8MM
1x

106

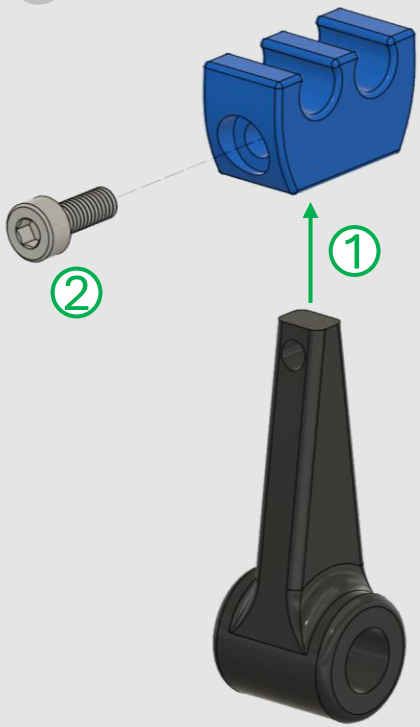

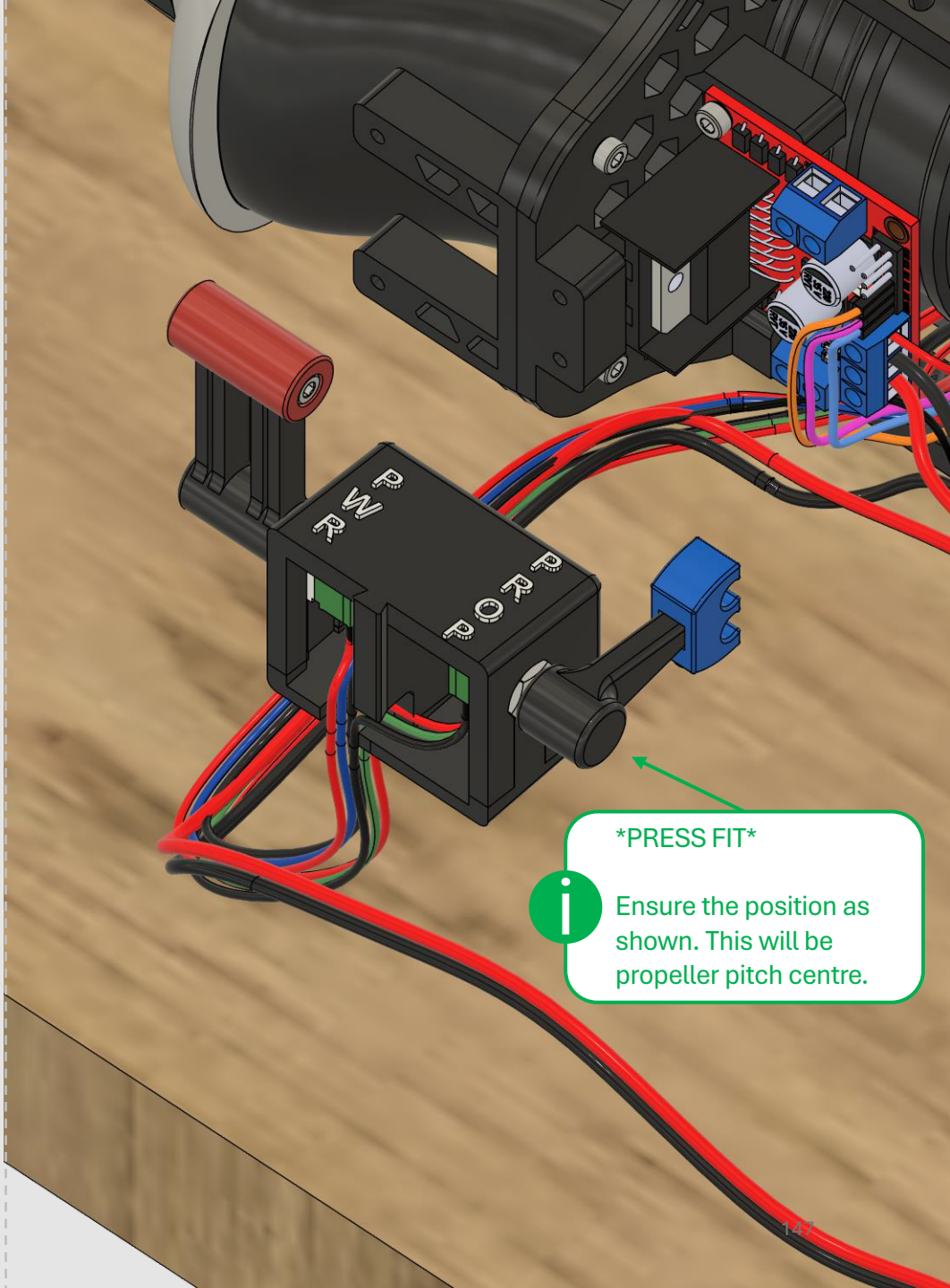



PROP CONTROL GEAR
1x



M3x8MM
1x

107



Ensure propellers are centred before “PROP CONTROL GEAR” is secured.

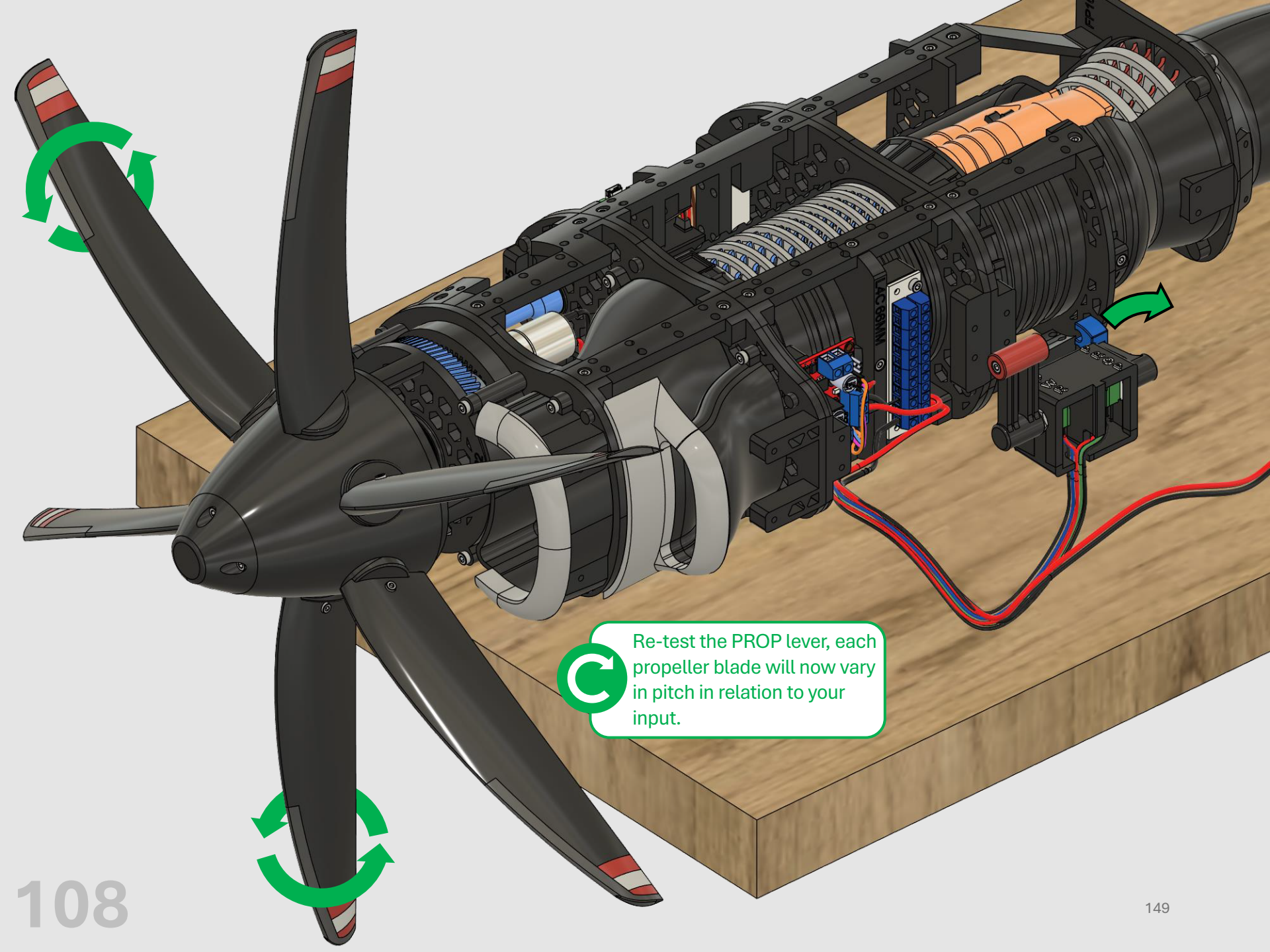
Re-test the PROP lever, each propeller blade will now vary in pitch in relation to your input.

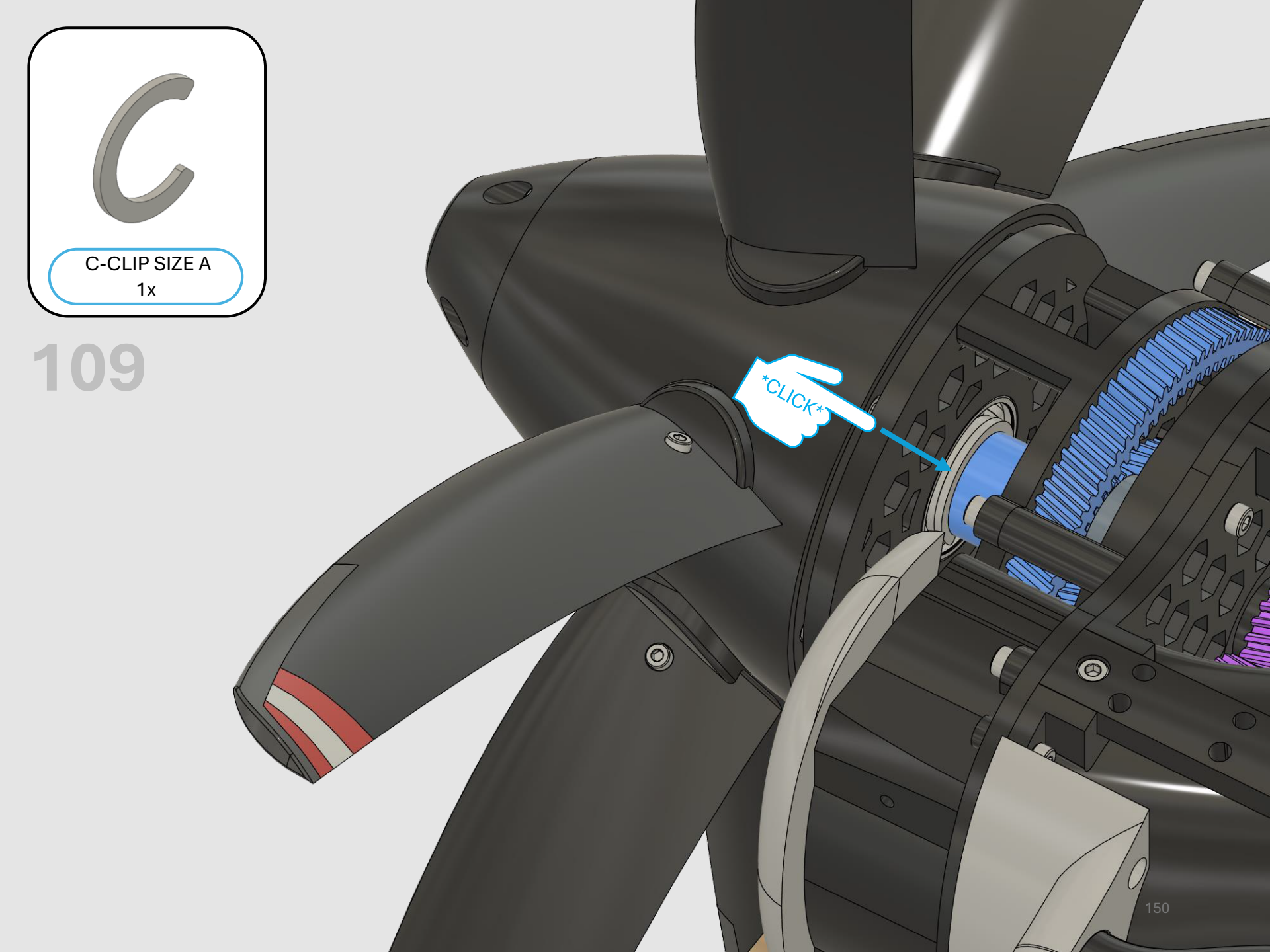
C-CLIP SIZE A
1x
109
CLICK
150

8. Cowling Installation

In this section we will attach the cowlings to the frame!



Required 3D Printed Parts:

- ❑ COWLING 1A
- ❑ COWLING 1B
- ❑ COWLING 2A
- ❑ COWLING 2B
- ❑ COWLING INSERT A
- ❑ COWLING INSERT B
- ❑ COWLING 3A TOP
- ❑ COWLING 3A UNDERSIDE
- ❑ COWLING 3A DOOR
- ❑ COWLING 3B
- ❑ COWLING 4A TOP
- ❑ COWLING 4A UNDERSIDE
- ❑ COWLING 4A DOOR
- ❑ COWLING 4B
- ❑ COWLING 5
- ❑ COWLING REAR
- ❑ COWLING 2A MULTI-MATERIAL (OPTIONAL)
- ❑ COWLING 2B MULTI-MATERIAL (OPTIONAL)

Required Non-Printed Parts:

- ❑ M3x8MM Hex Socket Screws 37x



COWLING 1A
1x



M3x8MM
3x

110

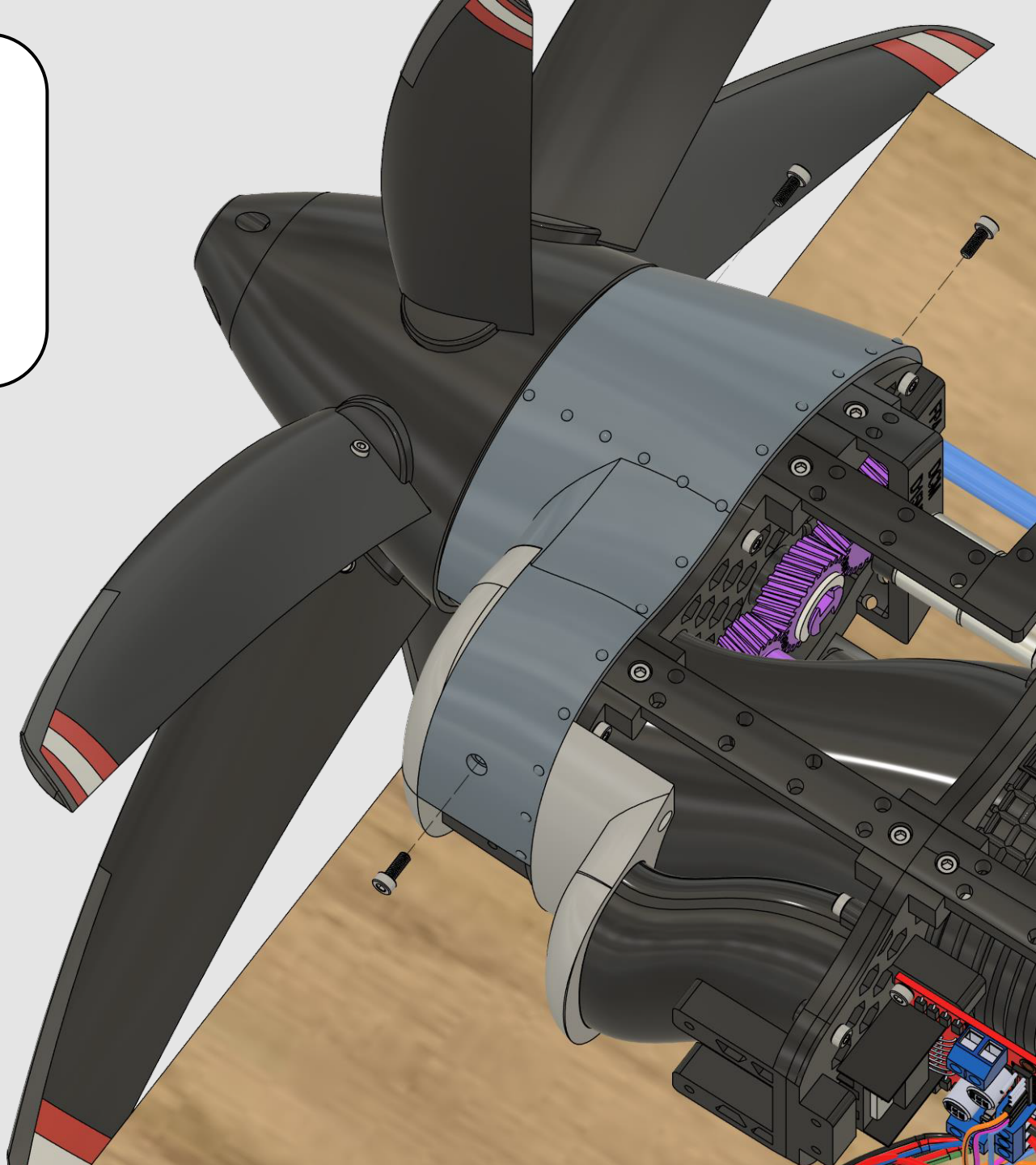



COWLING 2A
1x



COWLING INSERT A
1x

111

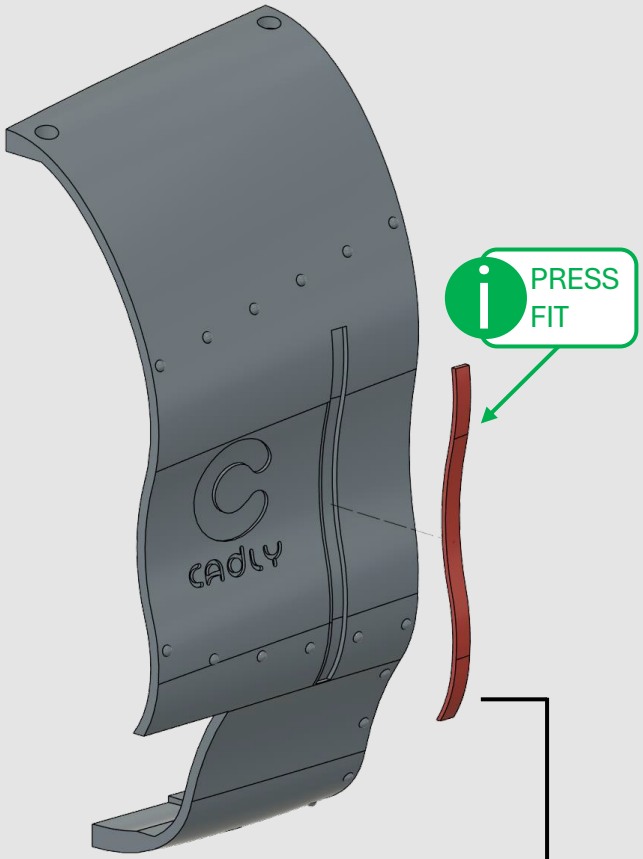

Multi-Material Option Available

COWLING 2A MULTI-MATERIAL.3mf

Go to Slide 31 for more details.



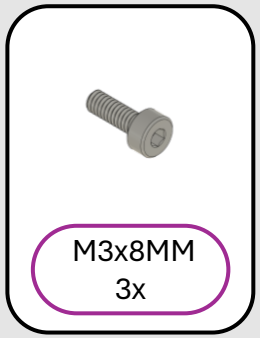

112

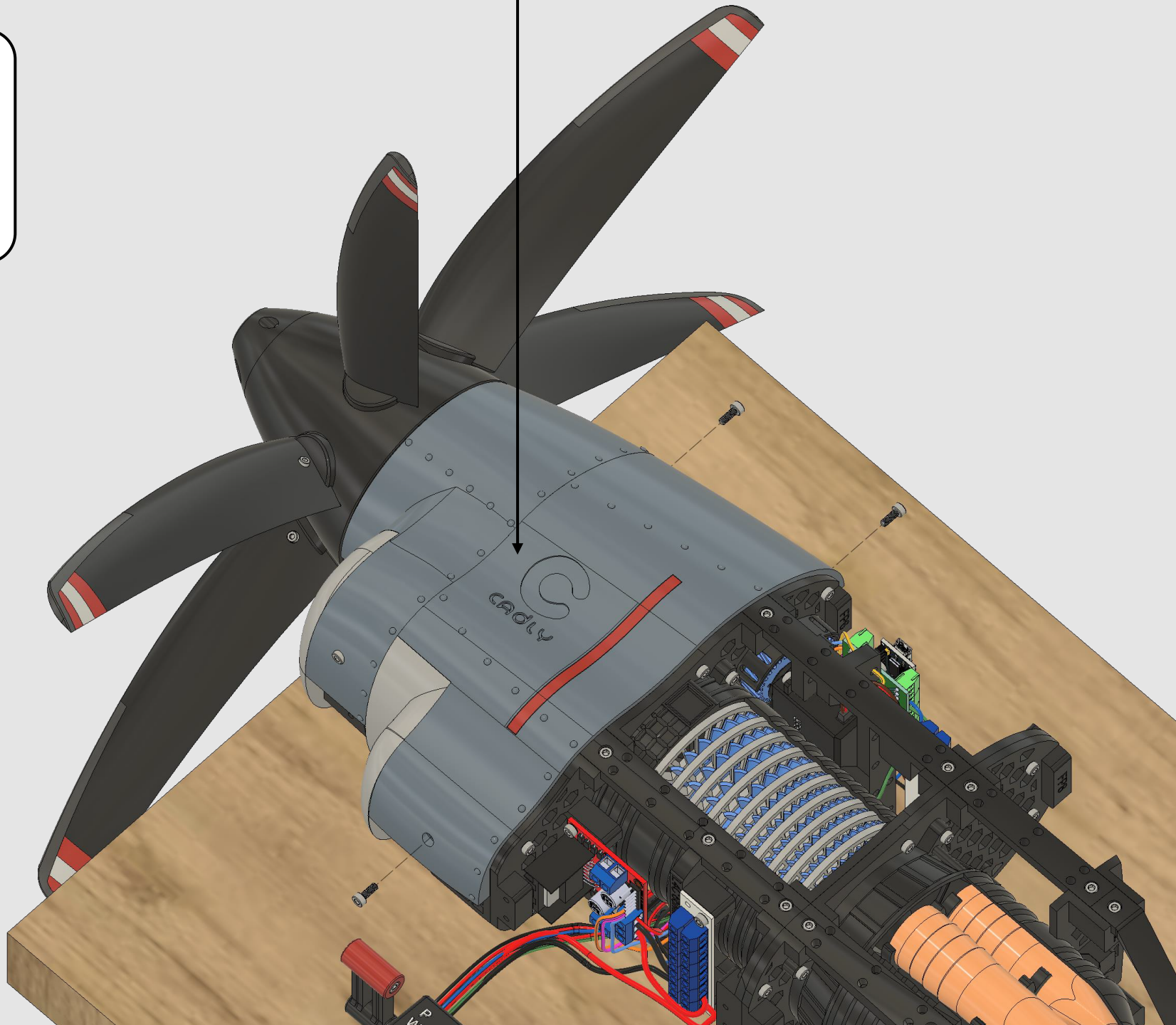

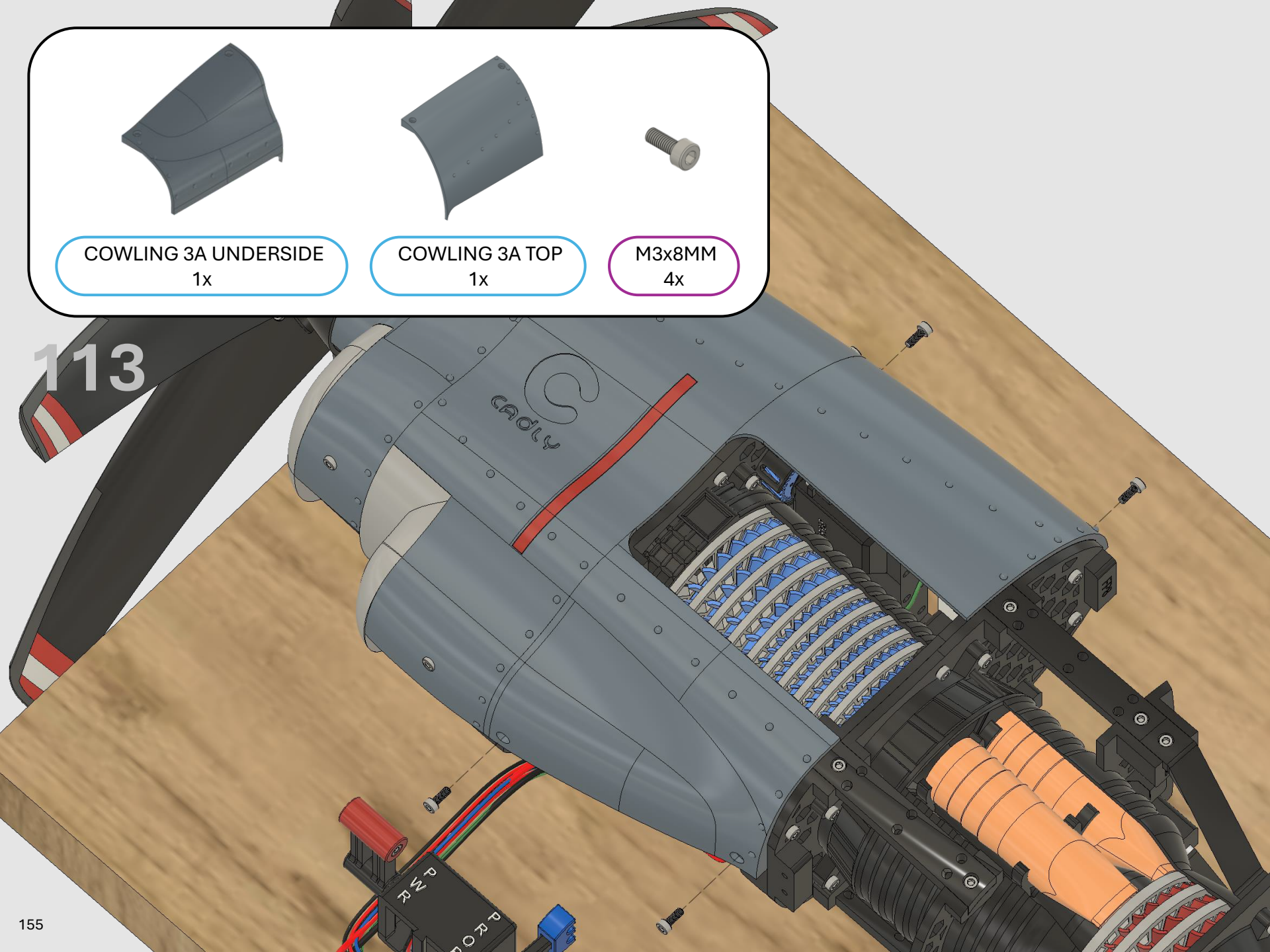
COWLING 3A UNDERSIDE
1x
COWLING 3A TOP
1x
M3x8MM
4x
113

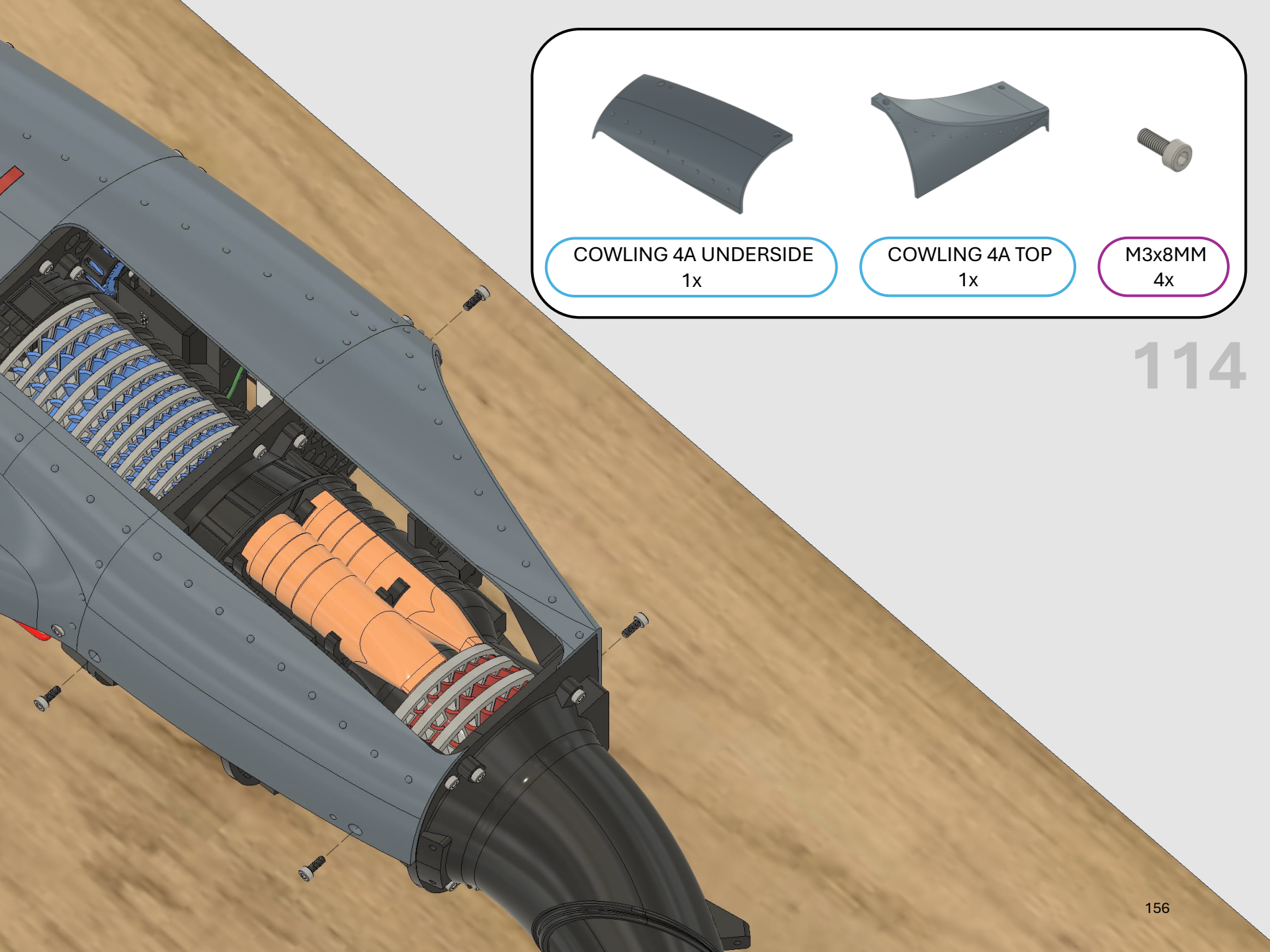

COWLING 4A UNDERSIDE
1x

COWLING 4A TOP
1x

M3x8MM
4x

114

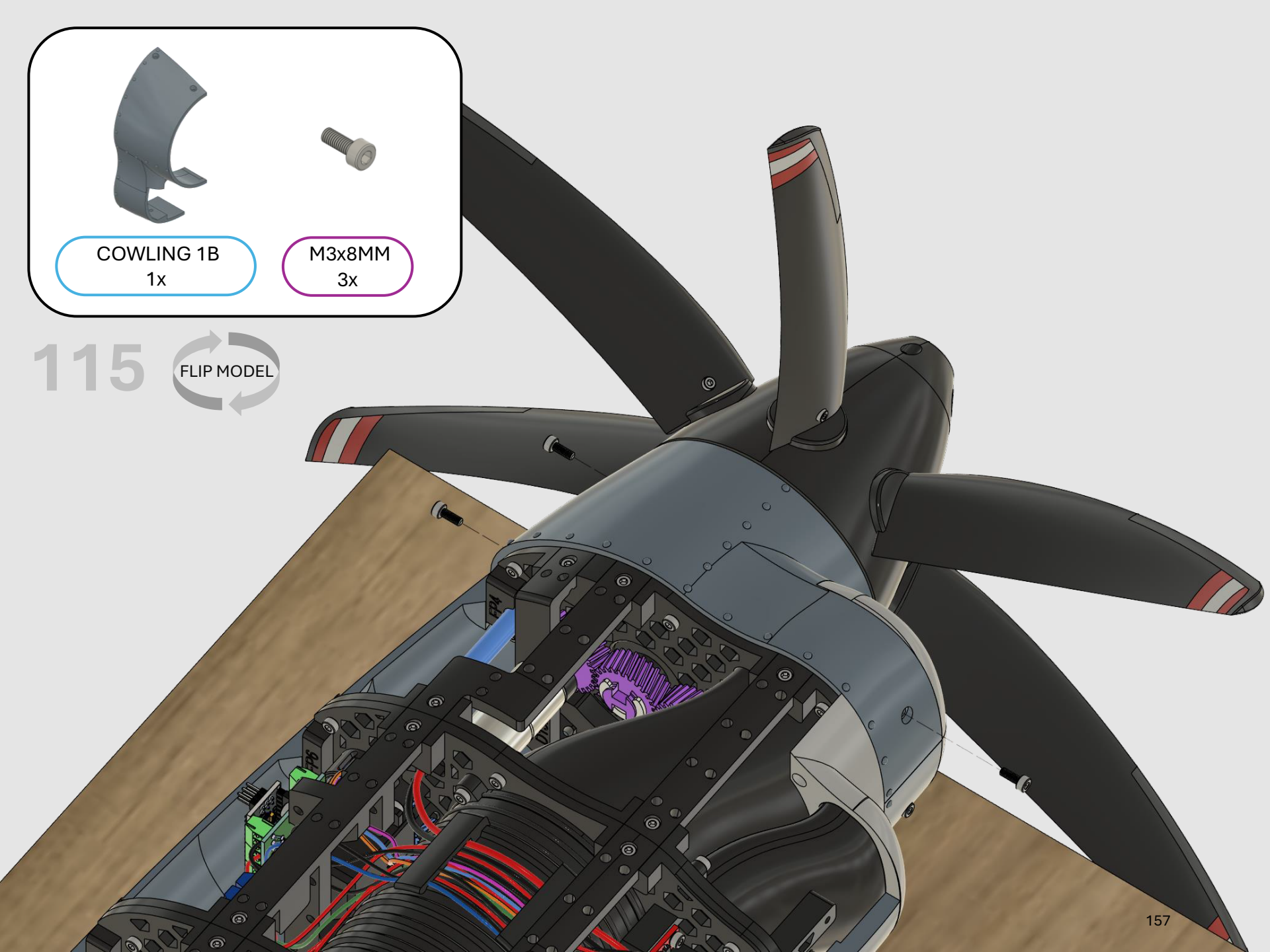
COWLING 1B
1x
M3x8MM
3x
115
FLIP MODEL



COWLING 2B
1x



COWLING INSERT B
1x

116

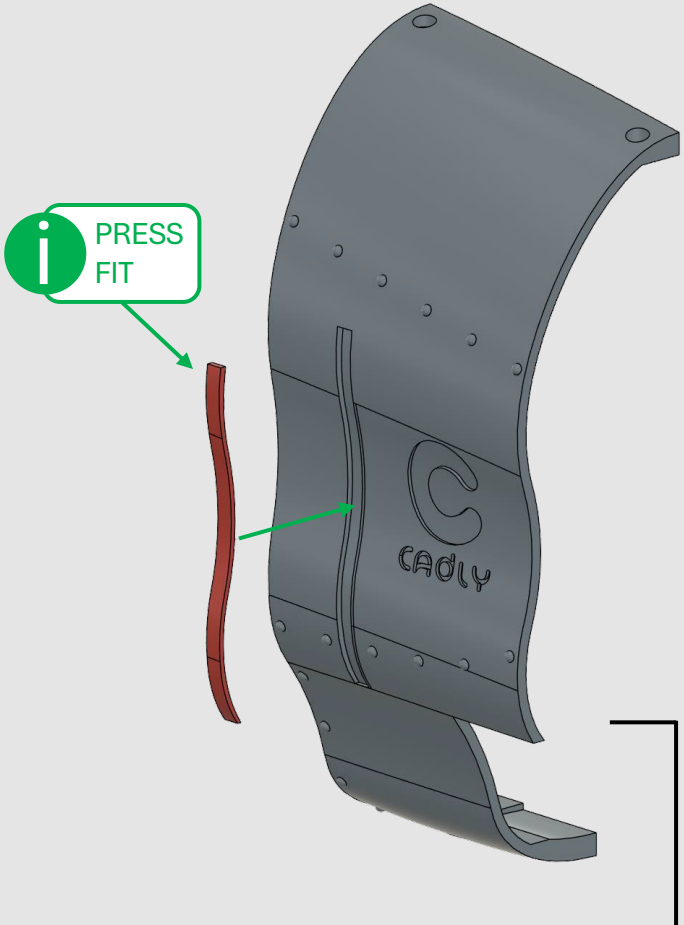

Multi-Material Option Available

COWLING 2B MULTI-MATERIAL.3mf



Go to Slide 31 for more details.

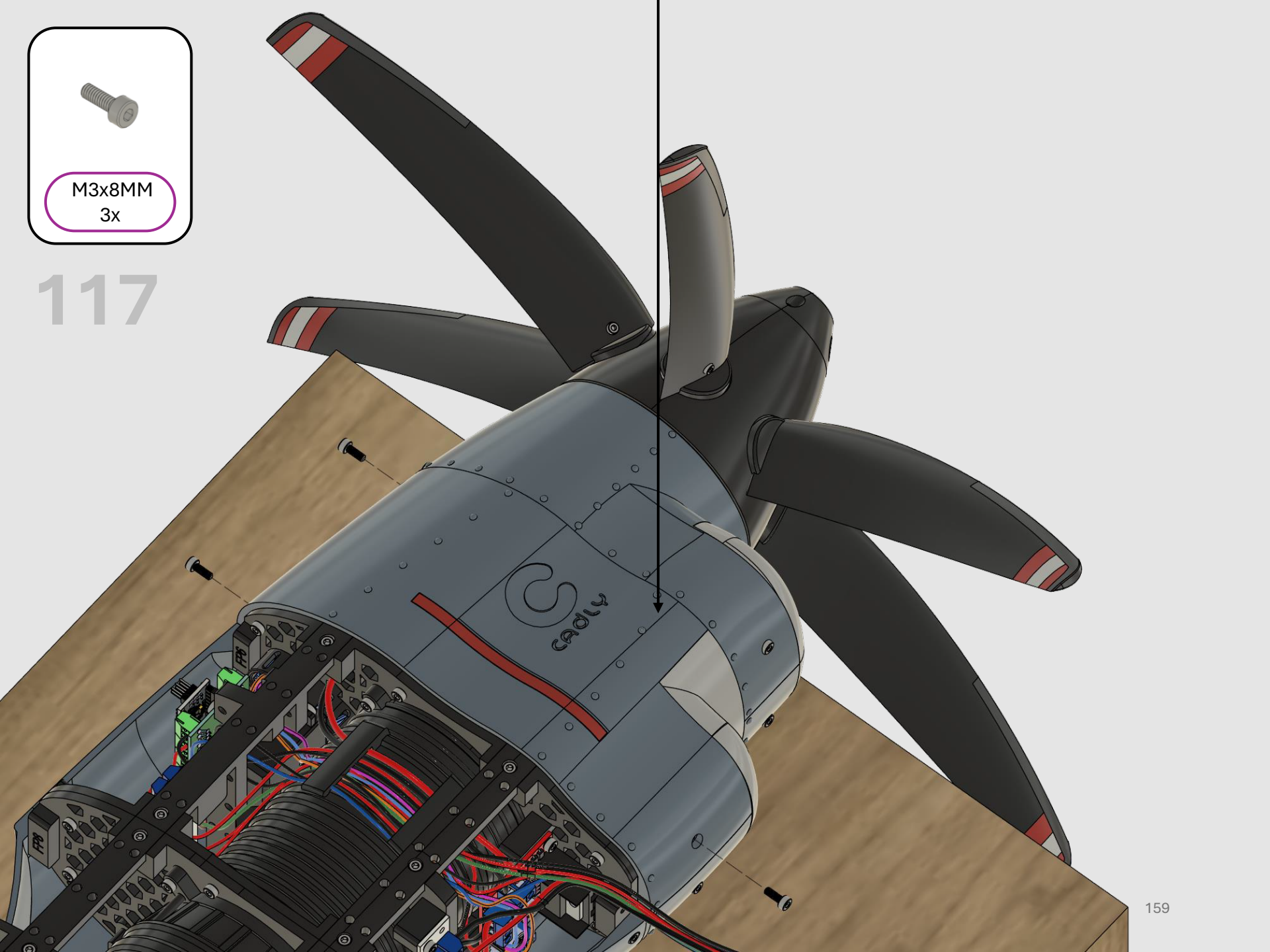
M3x8MM
3x
117

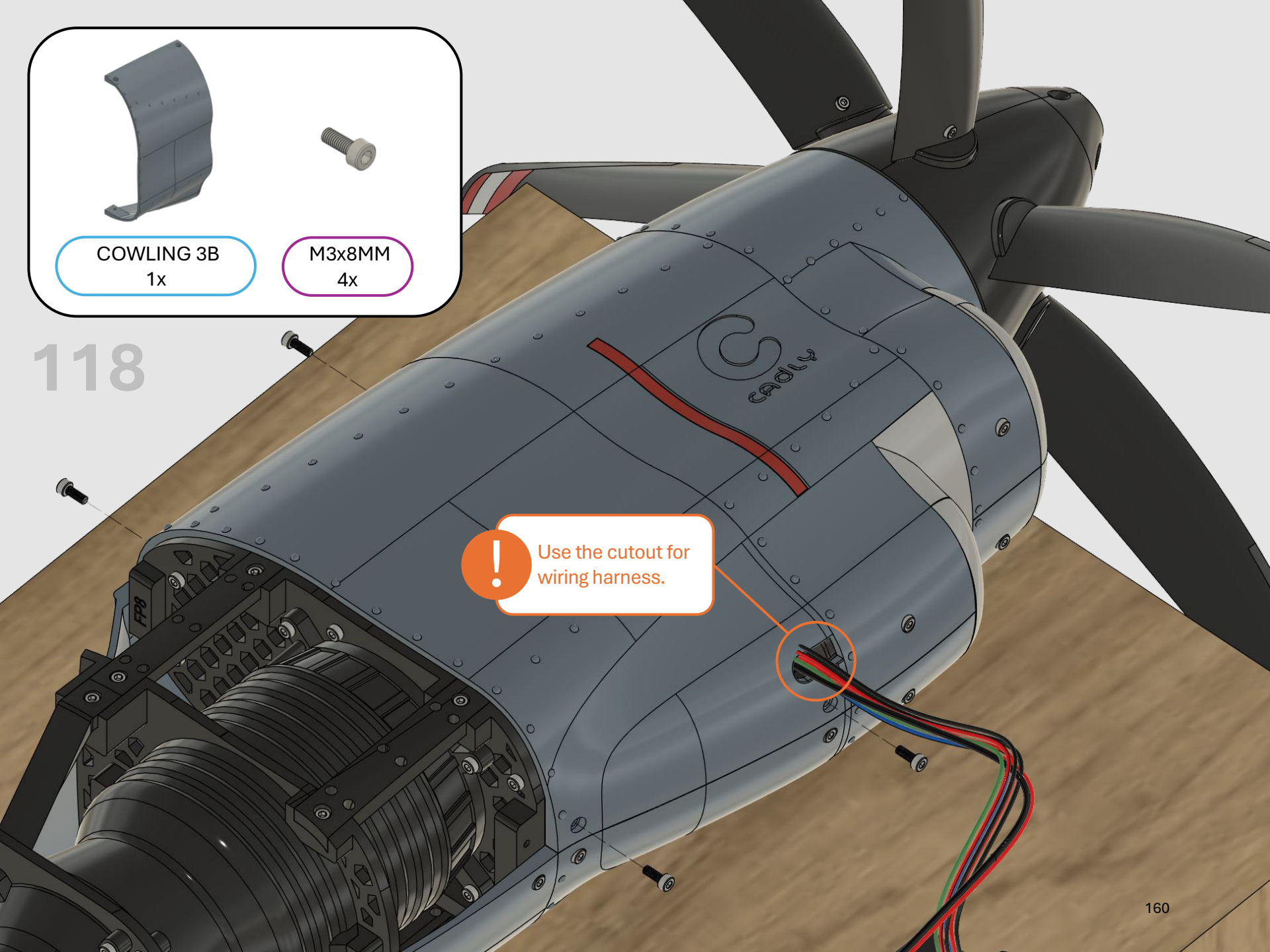
COWLING 3B
1x
M3x8MM
4x
118
Use the cutout for wiring harness.

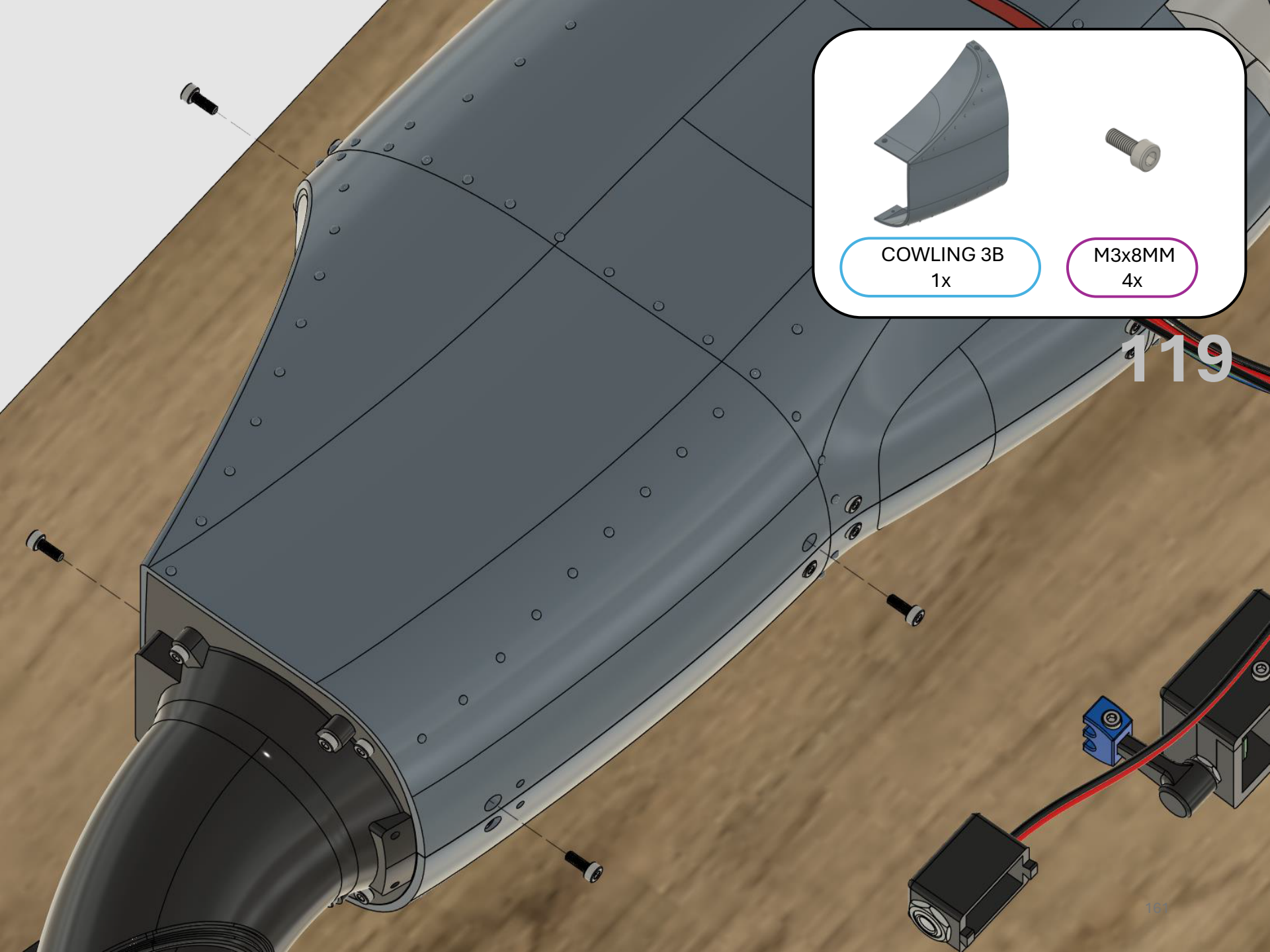
COWLING 3B
1x
M3x8MM
4x
119

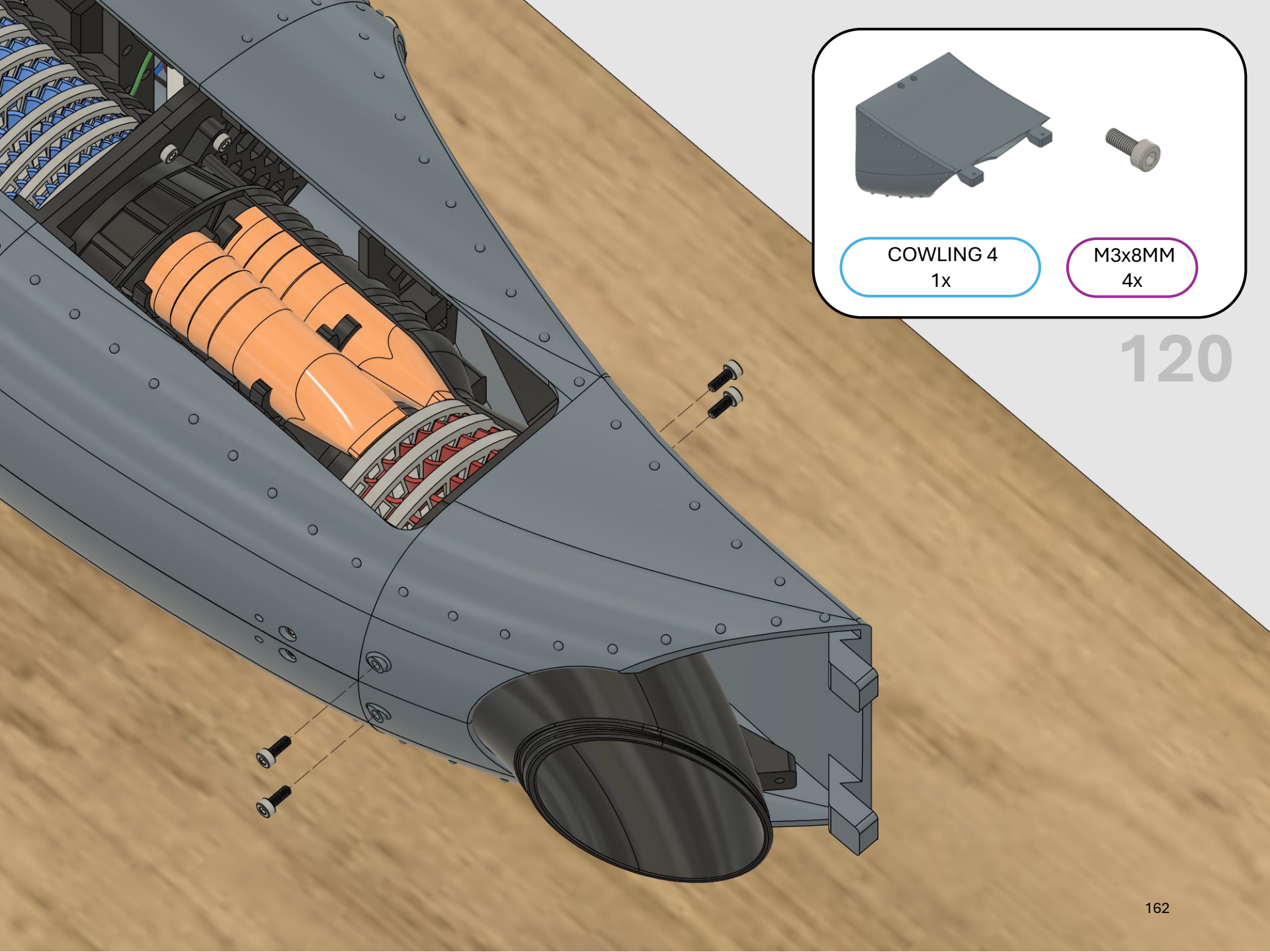

COWLING 4
1x

M3x8MM
4x


COWLING BRACKET
1x
M3x8MM
3x
121


STAND BRACKET
1x
M3x8MM
2x
122

Optional Accessory

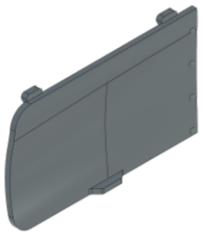

COWLING DOOR A
1x

123

1

2

CLICK

Optional Accessory

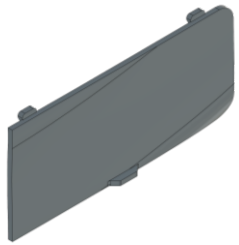

COWLING DOOR B
1x

124

CLICK

1

2

Cowling Installation Completed!



9. Stand Assembly

In this section we will assemble the stand.

Required 3D Printed Parts:

- ❑ STAND A
- ❑ STAND B

Required Non-Printed Parts:

- ❑ M3x8MM Hex Socket Screws 5x



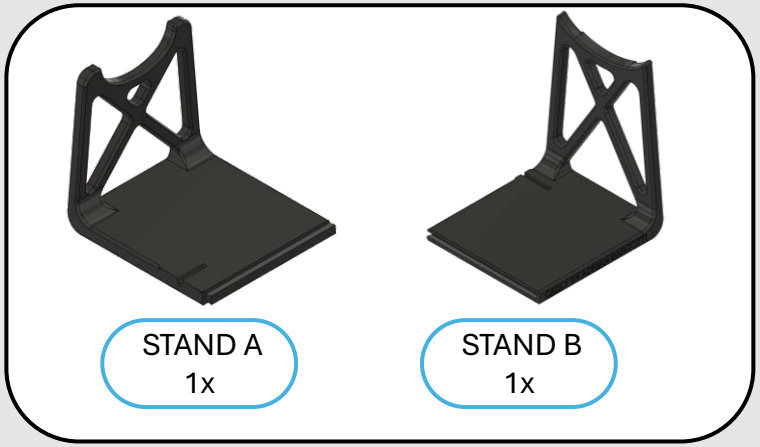

125





M3x8MM
1x

126

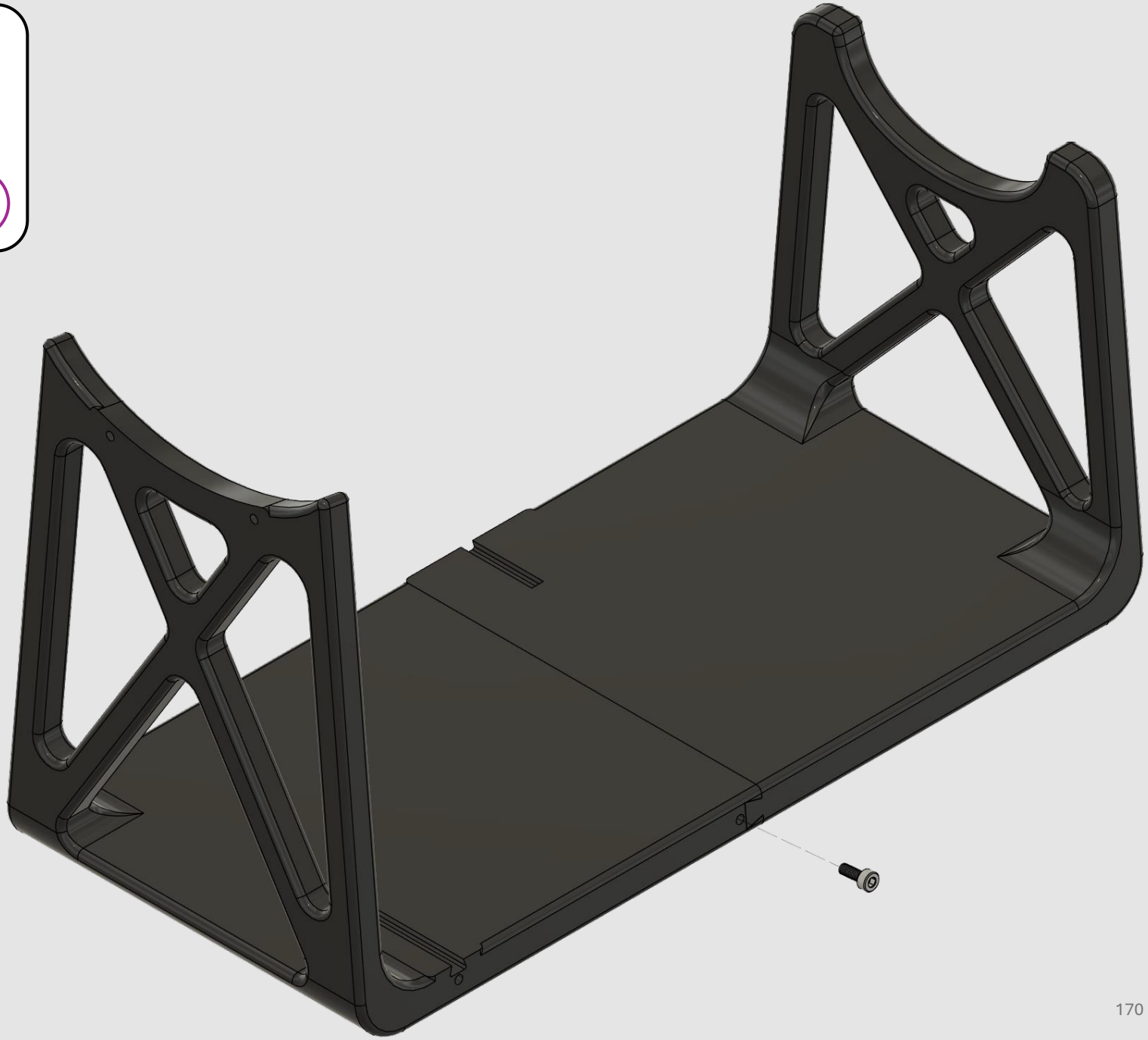

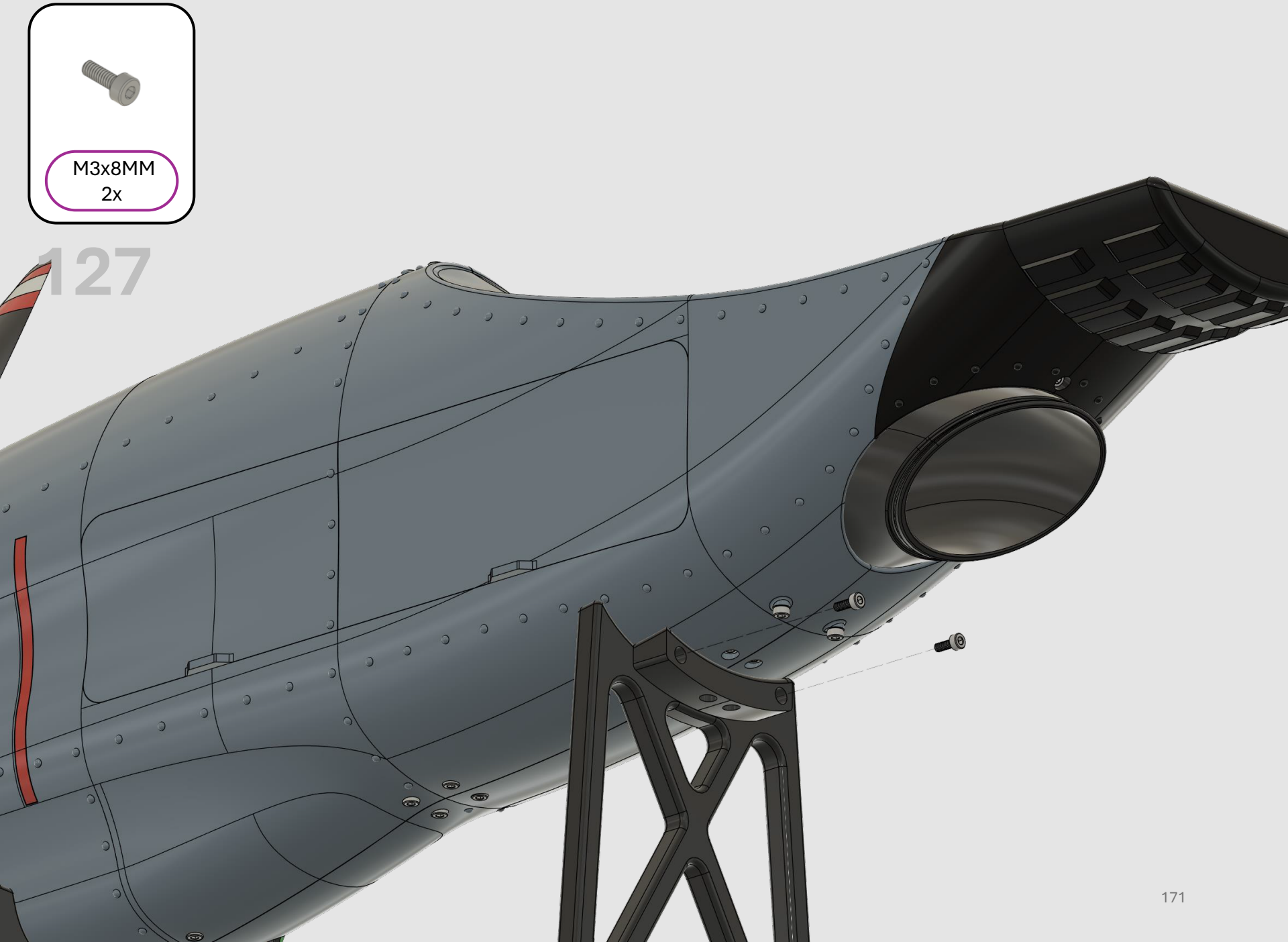
M3x8MM
2x
127

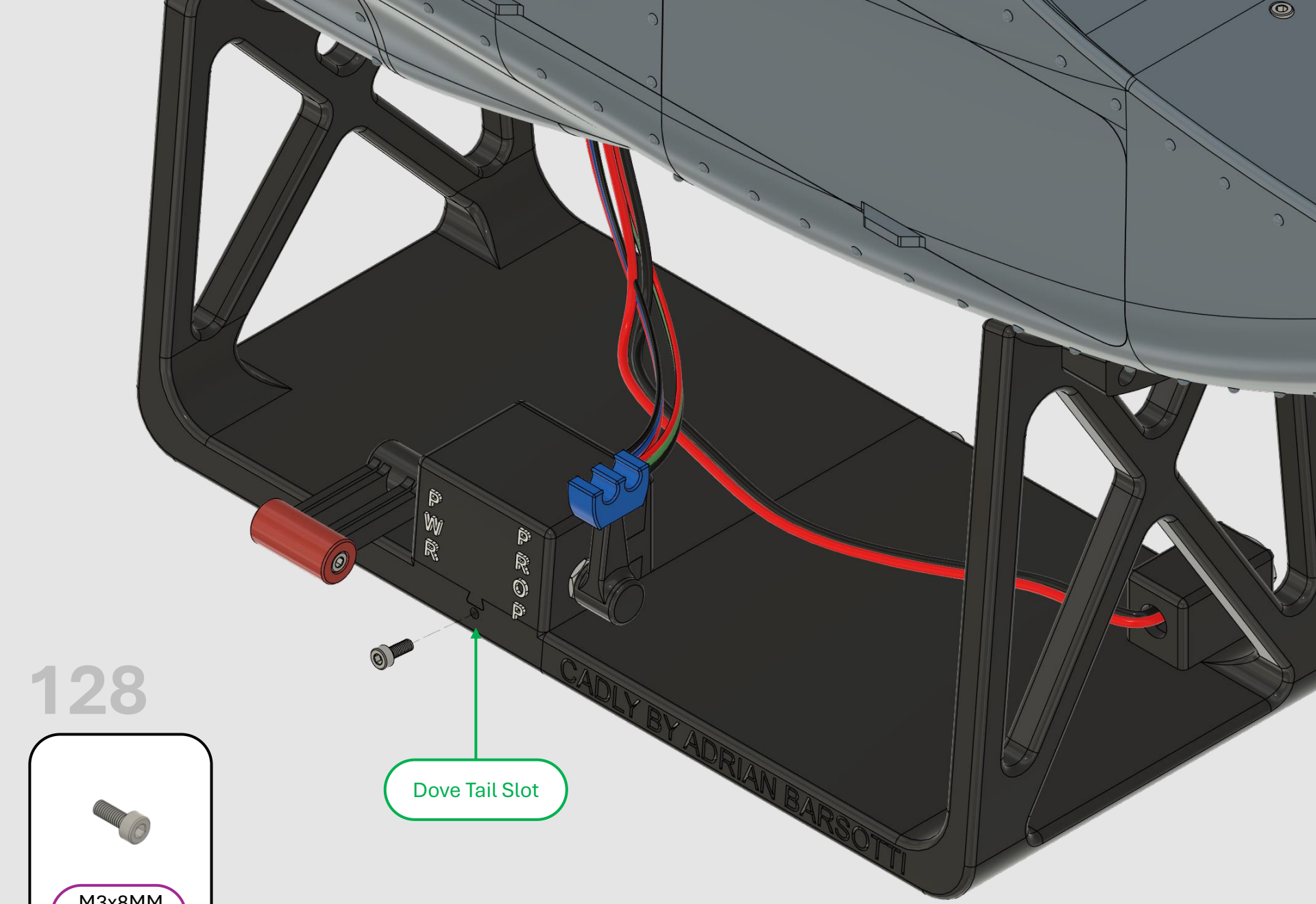

128

M3x8MM
1x

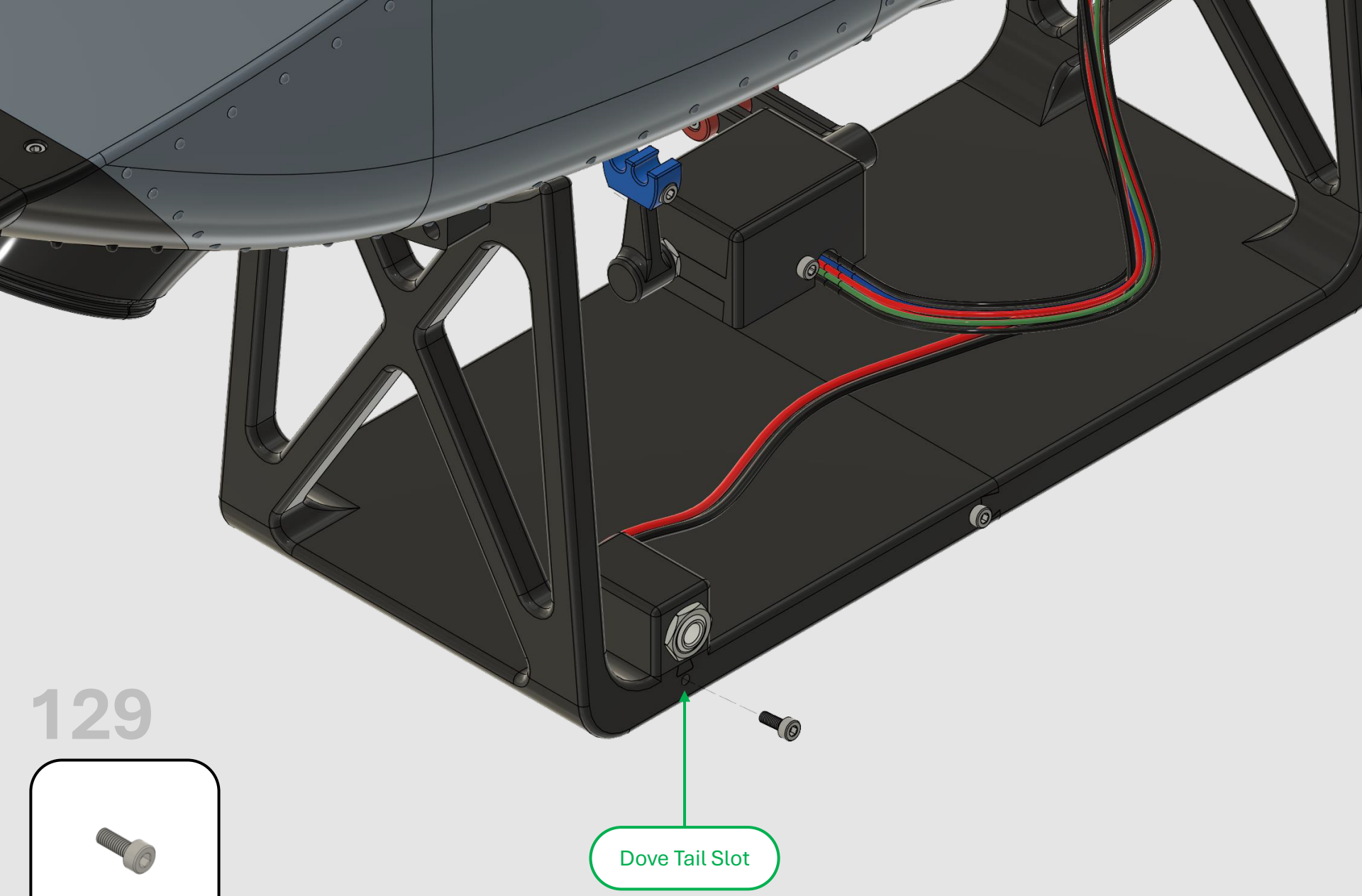

129

M3x8MM
1x

Stand Assembly Completed!

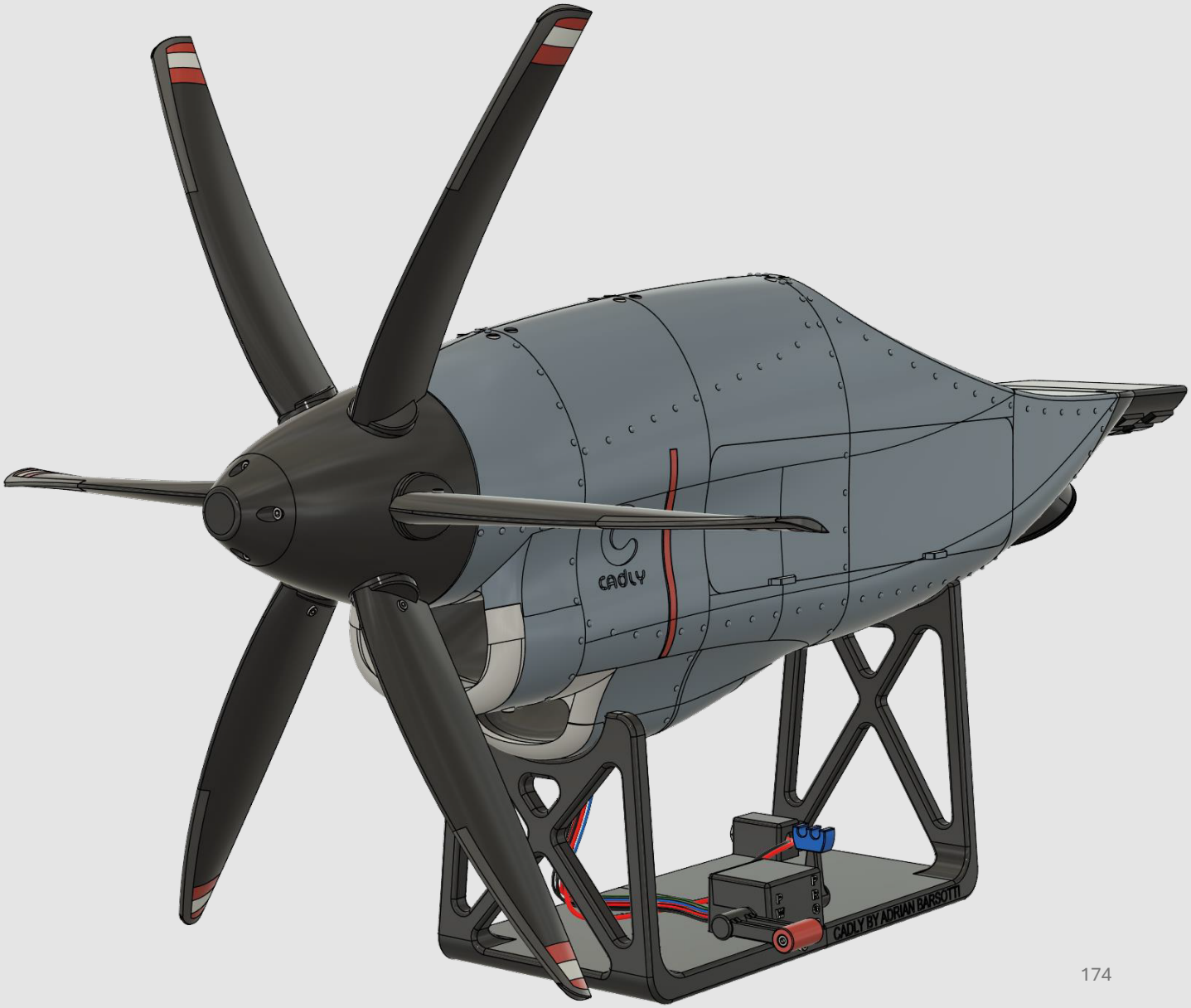

10. Inlet & Exhaust Covers (Optional)

In this section we will assemble the stand with

Required 3D Printed Parts:

- ❑ COVER BASEA
- ❑ COVER BASE B
- ❑ COVER BASE C
- ❑ COVER HANDLE 3x
- ❑ INLET COVER TAG 2x

Required Non-Printed Parts:

- ❑ M3x8MM Hex Socket Screws 9x



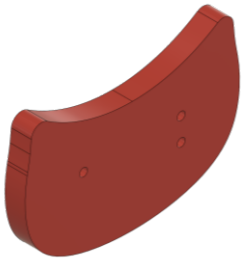

COVER BASE A
1x



COVER HANDLE
1x



COVER TAG
1x



M3x8MM
3x

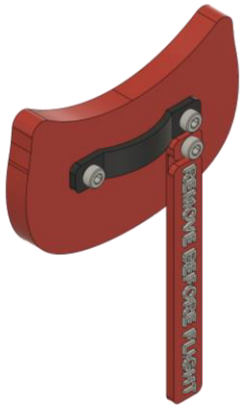

130

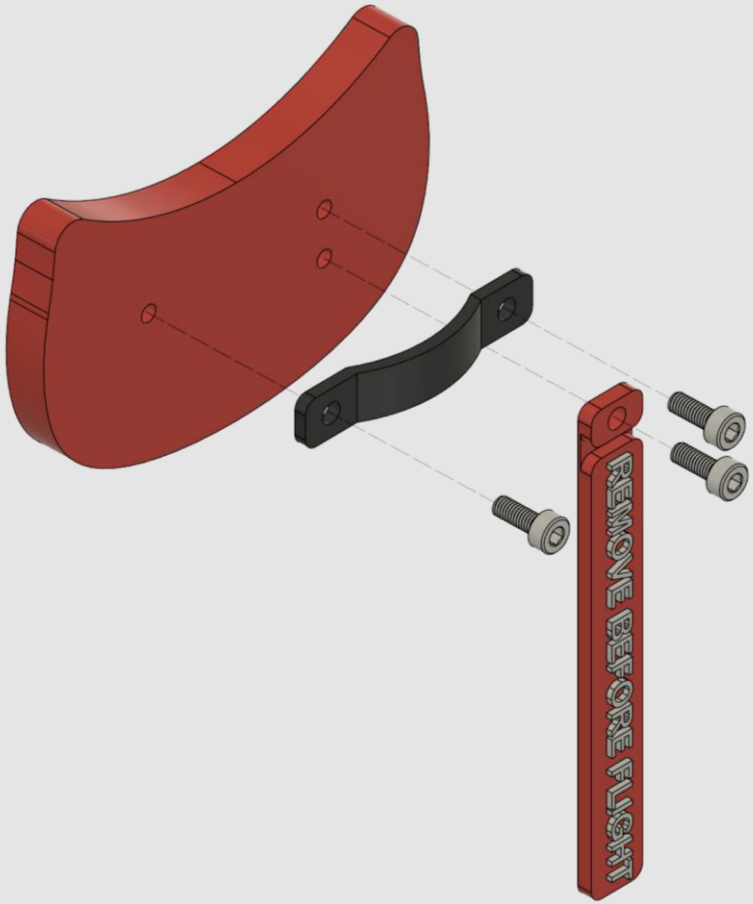

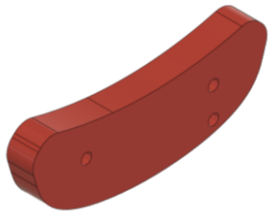

COVER BASE B
1x



COVER HANDLE
1x



COVER TAG
1x



M3x8MM
3x

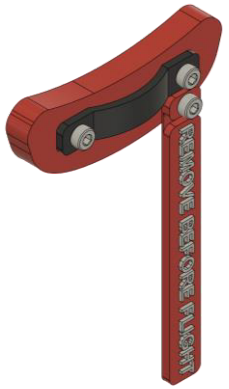

131

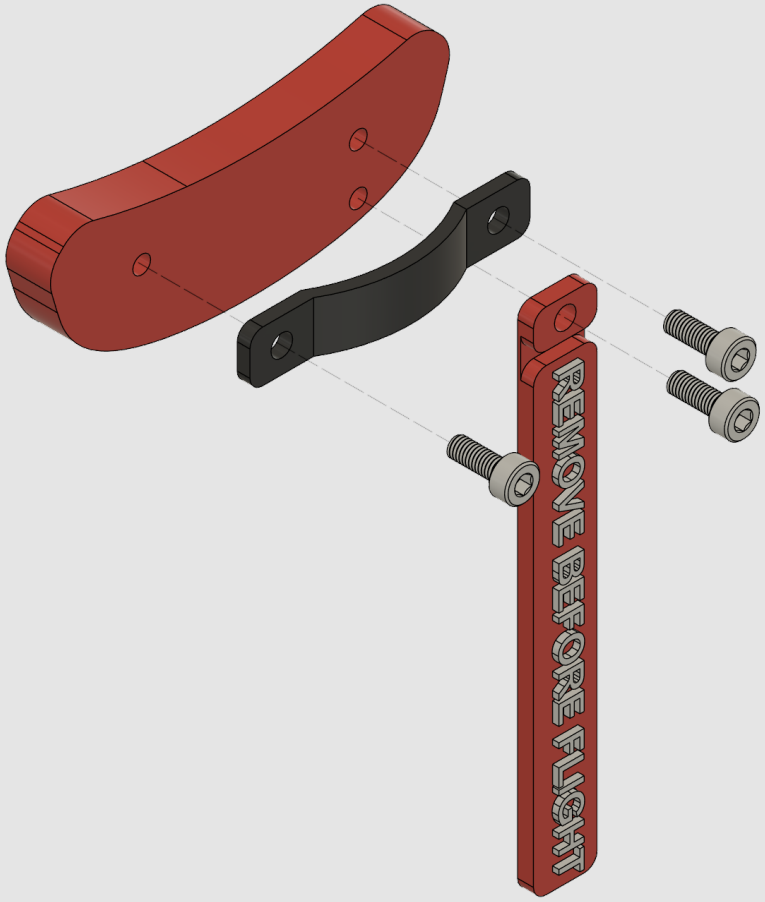


REMOVE BEFORE FLIGHT
REMOVE BEFORE FLIGHT

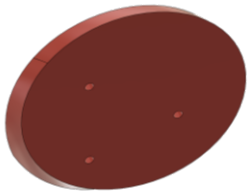

COVER BASE C
1x



COVER HANDLE
1x



COVER TAG
1x



M3x8MM
3x



133



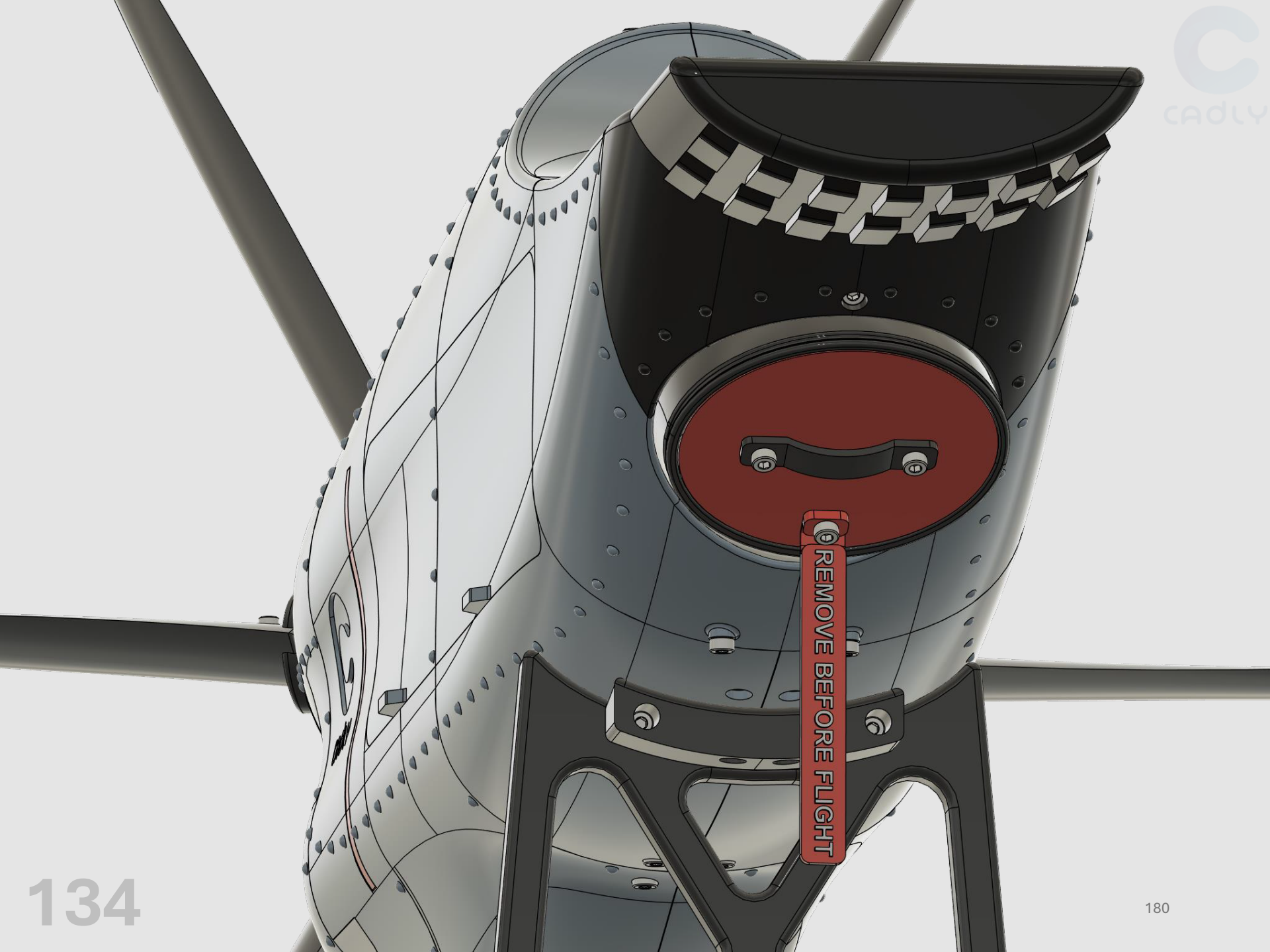
REMOVE BEFORE FLIGHT

Troubleshooting – Compressor Grinding

If you experience a grinding noise, this may be due to the compressors/turbines colliding with the stators.

This can be due to a few factors such as:

- warped print bed
- Removing part while still hot (warping part)

If this applies to you re-calibrate printer and ensure to allow part to cool.

